OPTIMAL CHOICE OF SPEED DIAGRAM FOR MACHINE TOOL GEAR BOX - A PENALTY FUNCTION APPROACH

A Thesis Submitted
In Partial Fulfilment of the Requirements
for the Degree of
MASTER OF TECHNOLOGY

Department of Mechanical Engineering
INDIAN INSTITUTE OF TECHNOLOGY
KANPUR

By
PRABHAT NARAYAN SINGH

to the

DEPARTMENT OF MECHANICAL ENGINEERING
INDIAN INSTITUTE OF TECHNOLOGY KANPUR

JANUARY, 1970

I.I.T. KANPUR
CENTRAL LIBRARY
Acc. No. A 54874
19 AUG 1978

TL
621.944
Si 64 o

ME-1970-M-SIN-OPT

To Maa and Bapi

CERTIFICATE

This is to certify that the thesis entitled " OPTIMAL CHOICE OF SPEED DIAGRAM FOR MACHINE TOOL GEAR B A PENALTY FUNCTION APPROACH " is a record of work carried out under my supervision and that it has not bee submitted elsewhere for a degree.

Department of Mechanical Engineering
INDIAN INSTITUTE OF TECHNOLOGY
KANPUR

J. Chakraborty,
Assistant Professor,
Department of Mechanical Enginee
Indian Institute of Technology
Kanpur

January 1971

POST GRADUATE OFFICE
This thesis has been approved for the award of the Degree of Master of Technology (M. Tech.) in accordance with the regulations of the Indian Institute of Technology Kanpur
Dated. 28/1/71

ACKNOWLEDGEMENTS

I am extremely indebted to my thesis advisor Dr. J. Chakraborty for his constant inspiration, guidance and freely giving his valuable time for discussion throughout the work.

I am thankful to Dr. M.P. Kapoor for his valuable suggestions from time to time.

I cannot thank my colleagues Mr. B.S. Bhadoria, Mr. M. Hariharan, Mr. P.C. Pande, Mr. G.V. Singh and Mr. T. Kaul enough for their constructive criticism and friendship.

My acknowledgements are due to the staff of Computer Centre without whose cooperation this work would have been incomplete.

I am grateful to Mr. J.D. Varma for his excellent and patient typing.

Prabhat Narayan Singh

SYNOPSIS

of the
Dissertation on

OPTIMAL CHOICE OF SPEED DIAGRAM FOR MACHINE TOOL GEAR BOX - A PENALTY FUNCTION APPROACH

Submitted in Partial Fulfilment of
the Requirements for the Degree
of

MASTER OF TECHNOLOGY IN MECHANICAL ENGINEERING

by

P. N. Singh
Department of Mechanical Engineering
Indian Institute of Technology, Kanpur

January, 1971

A compact gear box is one of the main consideration in the economics of a machine tool design. Compactness is dependent upon the layout and speed diagrams. A mathematical model for the compactness of a Z - speed gear box is formulated. Interior Penalty Function approach is used to arrive at an optimum speed diagram and the gears. The remaining components are designed and inspection data for gears are generated for the shop floor use.

TABLE OF CONTENTS

			Page
CERTIFICATE			
ACKNOWLEDGEMENTS			
SYNOPSIS			iv
LIST OF FIGURES			ix
NOMENCLATURE			
CHAPTER I	:	INTRODUCTION	1
	1.1 :	Critical Review of Past Investigations	2
	1.2 :	Present Investigations -Its Scope	4
	1.3 :	Definitions	5
CHAPTER II	:	DESIGN PHILOSOPHY	11
	2.1 :	Step Ratio	11
	2.2 :	Layout Diagram	13
	2.3 :	Number of Gear Pairs required	17
	2.4 :	Inter-departmental Activity	17
CHAPTER III	:	MATHEMATICAL FORMULATION	22
	3.1 :	Design Variables	22
	3.2 :	Nomenclature of Important Components	23
	3.3 :	Design Space	24
	3.4 :	Constraint Surface	24
	3.5 :	Objective Function	25
	3.6 :	Normalised Constraints	31

Page

3.7 : Equations of Constraint Surfaces 32

3.7.1: Positivity of Design Variables 32

3.7.2: Gear Teeth 33

3.7.3: Pitch line velocity 33

3.7.4: Wear Strength 34

3.7.5: Minimum Gear blank size 35

3.7.6: Modules 36

3.8 : Solution Scheme 37

3.9 : Penalty Function 39

CHAPTER IV : THE SOLUTION ALGORITHM 42

4.1 : Conditions for minimum 42

4.2 : Conversion to unconstrained minimisation 43

4.3 : Choice of initial r 45

4.4 : Extrapolation 47

4.5 : Method of unconstrained minimisation 49

4.6 : The gradient 51

4.7 : Linear minimisation 52

4.8 : Slope in $\bar{d}$ direction 54

4.9 : Convergence criteria 56

CHAPTER V : RESULTS AND DISCUSSIONS 60

5.1 : Example 1 60

5.2 : Example 2 60

5.3 : Examples 3,4,5,6 and 7 61

			Page
	5.4	: Example 8.	62
	5.5	: Example 9	62
	5.6	: Dicscussions	63
CHAPTER VI		: CONCLUSIONS AND RECOMMENDATIONS	81
	6.1	: Recommendations	82
REFERENCES			82a
APPENDIX A			83
	A.1	: Impossibility of three composite gears on a shaft.	83
	A.2	: Analysis with two composite gears	86
APPENDIX B			91
	B.1	: Shaft Design	93
	B.2	: Bearings	95
	B.3	: Clutches	97
	B.3.1	: Thermal Utilization of the clutch	98
	B.3.2	: Angular velocity of different components	99
	B.4	: Design of Keys	100
	B.5	: Correction of gear teeth	101
	B.6	: Inspection data	101

Page

APPENDIX C : 106

C.1 : Computer Programme 106

C.2 : Input 114

C.3 : Programme Output 118

C.4 : Programme Listing and Sample output 118

LIST OF FIGURES

		Page
Figure 1.1	Main drive of 18 speed gear box.	7
1.2	Layout Diagram for 18 speed gear box.	8
1.3	Main drive of 10 speed gear box.	9
1.4	Layout Diagram for 10 speed gear box.	10
2.1	Relation between speed r and ratio B, number of steps Z at standard ratio	20
2.2	Different layout for 18 speed gear box.	21
3.1	Composite gears.	40
3.2	Back gear shaft arrangement.	41
4.1	Zigzagging.	59
4.2	Example of one dimensional minimization.	60
5.1-5.9	Initial and final speed diagrams of example problems.	72 to 80
A-1	9 Speed gear box with 3 - composite gear box.	83
A-3	6 Speed with 2 - composite gear box.	84
B-1	Typical gear box shaft	87
B-2	Loading for first shaft	88
B-3	Electromagnetic Clutch	89
B-4	Different speeds of components when clutch is energized.	90
C.1	Flow Diagram	119 - 120

NOMENCLATURE

ϕ	-	Common ratio of spindle speeds.
Z	-	Total number of spindle speeds.
N_i	-	Total number of speeds of ith shaft.
m	-	Total number of groups
n_i	-	Number of transmission from ith group.
D	-	Number of groups with equal number of transmissions.
M	-	Total number of possible layout diagram.
B	-	Speed range ratio.
x_i	-	Characteristics of ith group.
Z_{ij}	-	Number of teeth in ith gear of ith shaft.
Z_g	-	Number of teeth in gear.
Z_p	-	Number of teeth in Pinions.
N_g	-	Total number of gears.
R_{ij}	-	ith speed of ith shaft
S_{ij}	-	Minimum speed of ith gear on ith shaft.
T_{ij}	-	Maximum speed of ith gear on ith shaft.
L_{ij}	-	Composite gears (Information about)
U_{ij}	-	ith transmission ratio of ith shaft
$\bar{X}$	-	Design variables
$\bar{X}^*$	-	Optimum Design Variables.
n	-	Total number of design variables.
$f(\bar{X})$	-	Objective function
$g_i(\bar{X})$	-	ith constraint.
N_c	-	Total number of constraint

CHAPTER I

INTRODUCTION

The designer of a multipurpose machine tool has to provide a certain speed range which covers the requirements of the different operations, types and shapes of work-pieces and qualities of the surfaces that are to be machined. These requirements together with the material of work-pieces and tools determine the most economic speeds for the two machining movements: the cutting movement and the feed movement.

The ideal situation for handling the two machining movements would be to provide stepless spindle and feed speeds. However, the majority of machine tools rely on stepped drive mainly because of rigidity considerations and ease in manufacturing them. Thus, the gear box,[1] giving the required spindle and feed speeds is one of the most important sub-assemblies.

There are several possible arrangements by which the required number and magnitude of spindle speeds may be achieved for the same speed of the input shaft. These arrangements are called the ray, tree, or layout diagrams (Fig. 1.2, and Fig. 1.4). For each such layout diagram there are several ways by which the desired spindle speeds may be obtained. This is possible because the transmission ratios between the

1. Fig. 1.1 and Fig. 1.3 show the schematic arrangement of shafts and gears in developed view for possible 10 and 18 speed gear boxes.

different shafts may be interchanged or altered. Any such arrangement of obtaining the required spindle speeds is depicted in the speed diagram. Therefore the problem of a gear box design is complete once a suitable ray and corresponding speed diagram[1] is chosen and the components are designed for the adequate power transmission at the speeds obtained by the speed diagram.

1.1 Critical Review of Past Investigations:

F. Koenigsberger[(1)] has put some criteria for the suitable choice of a ray diagram. But the author is not very decisive about the appropriate choice of speed diagram for the proposed ray diagram. The dynamic performances of a gear drive, according to him, depend largely upon the bending and the torsional deformation of shafts, gears etc. The stiffness of a transmission between input and output shaft decreases with increasing lengths of the shaft and the centre distance between the shafts. Therefore, the author agrees in principle that such speed diagrams should be chosen which will require least centre distance.

G. White proposes a method to select the gears for a four speed transmission with two composite gears. The arrangement for which maximum number of similar gears can be

1. Henceforth mention about speed diagram shall always be corresponding to the ray diagram.

used is also discussed by the same author. The algorithm is to solve a set of non linear algebraic equations with number of teeth in different gears as the variables. This works well with low number of transmissions from a gear box but the equations become very complicated and non linear in nature with the increase in the transmissions.

In a machine tool manufacturing concern, the gear box is designed by arriving at a workable ray and a corresponding speed diagram based upon the designer's past experience. The general norm which is followed in the industry states - "Out of innumerable speed diagrams available, those should be chosen for which the left side of the speed diagram is most concave". It follows from here that the intermediate shafts should have as high speeds as possible.

F. A. Cinadr [11] has recently solved a gear box optimization problem which is an eye-opener for the engineers using computers in machine design. With the help of his programme one can find the optimal dimensions of machine elements like gears, clutches, bearings, keys etc. for a most compact 12 speed gear box. But the programme suffers from the following disadvantages:

1. The modules have not been selected as independent design variables.

2. The programme can handle the design of a 12 speed gear box for one particular layout diagram only.

The main objection to the arbitrary selection of a speed diagram is that one may not choose the speed diagram which gives the minimum centre distance between the shafts of the gear box. Therefore, in the view of the present author, if the speed diagram is arbitrarily selected then the optimal choice of the remaining gear box components has little significance.

1.2 Present Investigation - Its Scope:

Here a mathematical model of a z-speed gear box has been developed. Depending upon a selected optimality criterion, corresponding to any layout diagram, an optimal speed diagram can be obtained. All the members of the gear box are designed for all loading conditions out of which the best dimensions are chosen. For this, a computer programme, to avoid excessive hand computations has been developed. Important inspection data for checking these components is also generated in the same computer programme.

In view of the fact that the compactness of the gear box leads to economy of resources in terms of saving of material, machining time and weight, the minimum centre distance between the first shaft and the spindle is chosen as the optimality criterion.

The optimal design problem is formulated as a mathematical programming problem. The optimization algorithm chosen is the Fletcher and Powell's variable metric method. The method is iterative in nature and seeks the optimum from within the constraint set. The method is discussed in detail in Chapter IV.

1.3 Definitions:

Gear Box: A sub-assembly of the machine tool consisting of spindle, motor and other intermediate shafts with gears mounted on them. Through different pair of gear connections the desired output speed of the spindle is obtained. (Fig. 1.1 gives the schematic diagram of an 18 speed gear box).

Layout Diagram: (tree or Ray diagram) This indicates the mode of transmission of power and speed from motor shaft to spindle shaft for a given number of spindle speeds. (Fig. 1.2 represents a layout diagram for an 18 speed gear box). The lines (U_{11} . U_{12} etc.) indicate the transmission from one shaft to the other. The distance between two such transmissions is called the step of transmission ratio (As $\emptyset^1$ on shaft No. 2 or $\emptyset^9$ on shaft No. 5).

Group of transmission: If the spindle speeds z of a gear box be split in K simple numbers (viz. for z = 18 = 3 x 3 x 2, K = 3 for z = 24 = 2 x 2 x 2 x 3 or 4 x 3 x 2, K = 4 or 3 respectively

depending on how the designer wishes to split them) then there are K groups of transmission. (For the arrangement shown in Fig. 1.2 there are 4 groups viz. 18 = 3 x 3 x 1 x 2).

Step of Spindle speed: This indicates the common ratio of the series of spindle speed in case of geometrically stepped speeds. This shall be indicated by "Ø".

Group characteristic: This is the power index of "Ø" of the common ratio of speeds from a group (viz. in Fig. 1.2, 1 for group 1, 9 for group 4).

Speed Diagram: This represents the actual speed for all the shafts together with values of different transmission ratios for a particular layout diagram. The shafts are plotted as equidistant parallel lines and the speeds on a shaft are plotted on logarithmic scale. (Fig.6.1)

Speed range ratio (B): This is the ratio of maximum to minimum spindle speed.

Composite gears: When a driven gear acts as a driver gear for the next shaft, it is called a composite gear.

Back gear shaft: If nth shaft in a drive be the back gear shaft then it enables (n + 1)th shaft to have all the speeds of the (n + 1)th shaft with reductions which is not possible by a single pair of gears.

Main drive of 18 speed gear box

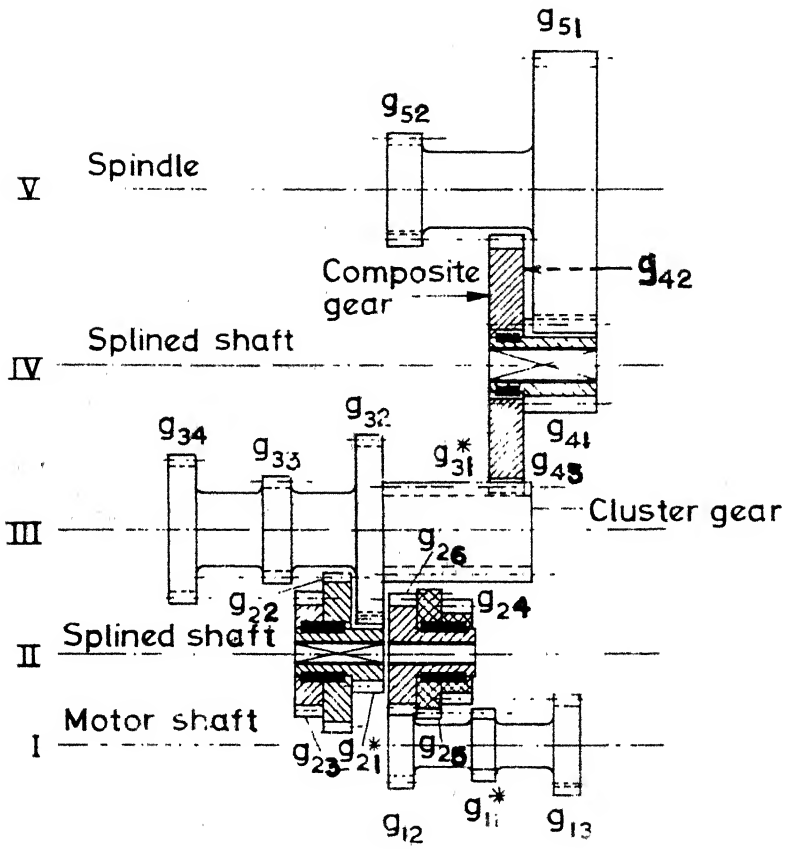

Asterisked gear and their module indicate desigin variables.

Fig. I -1

LAYOUT DIAGRAM FOR 18 SPPED GEAR BOX

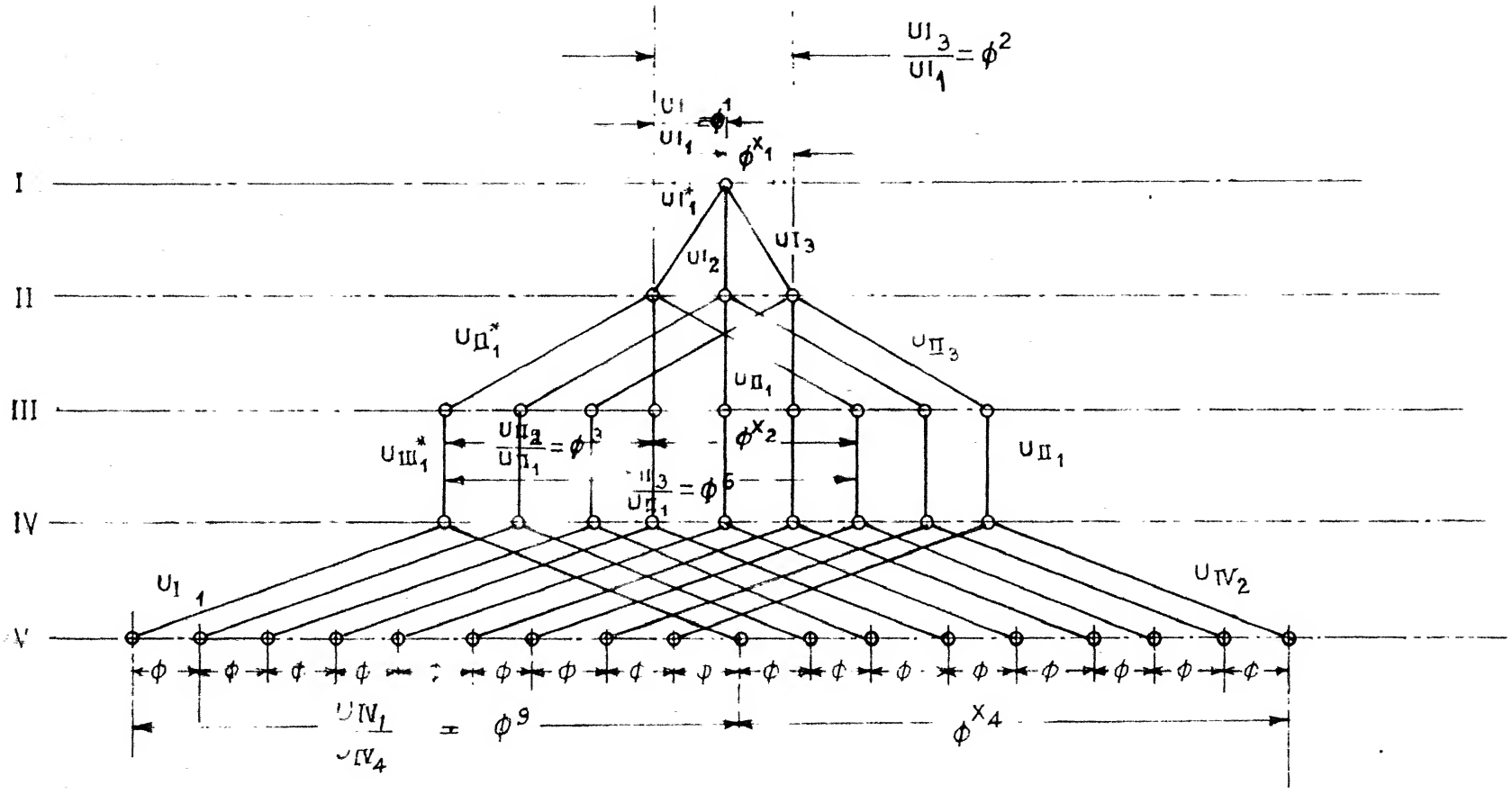

(ASTERISK DENOTE DESIGN VARIABLE)

FIG. 1-2

MAIN DRIVE OF A TEN SPEED GEAR BOX

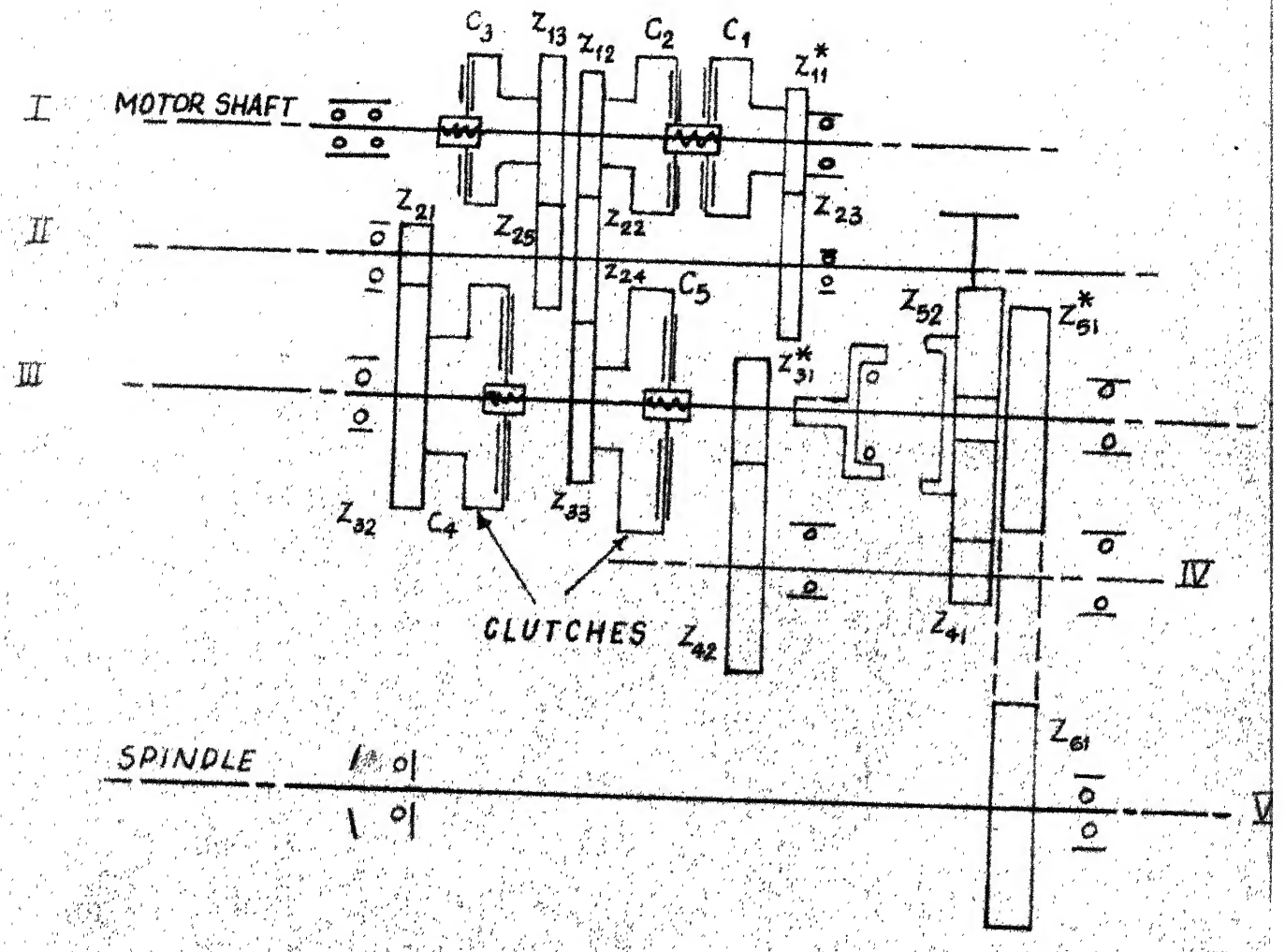

ASTERISKED GEARS AND THEIR MODULES INDICATE DESIGN VARIABLES

FIG 1·3

LAYOUT DIAGRAM FOR 10 SPEED GEAR BOX

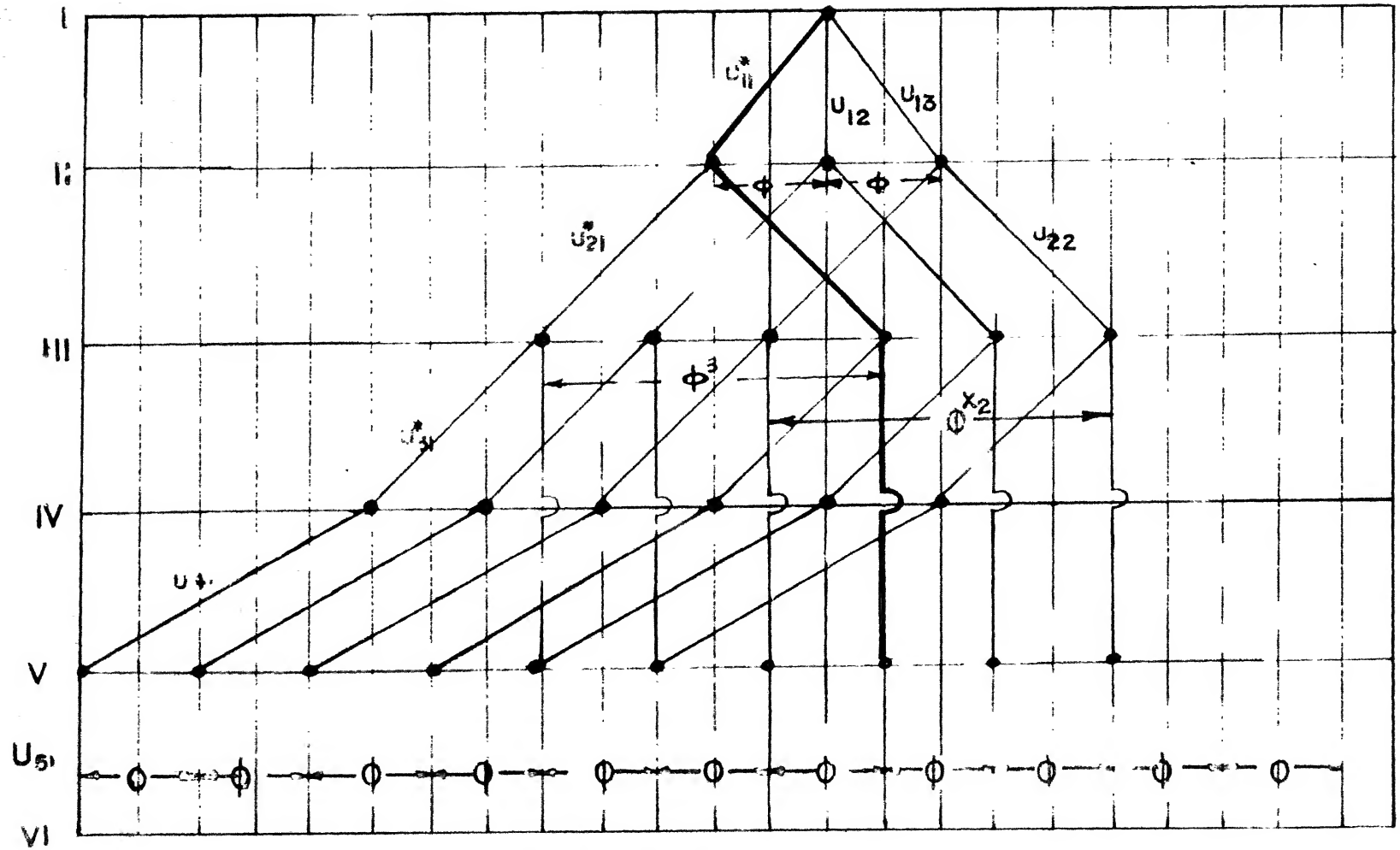

(ASTERISK DENOTE DESIGN VARIABLES)

FIG-4

CHAPTER II

DESIGN PHILOSOPHY

In this chapter, important factors which aid in the choice of the number of spindle speeds and corresponding selection of layout and speed diagrams are enumerated. The total number of gears necessary to obtain required spindle speeds is not unique. Some qualitative considerations are presented for the selection of the number of gears.

2.1 Step Ratio:

The ratio of two consecutive speeds of spindle is called the step ratio. Most economic cutting speed for a particular material and job diameter of a work-piece is unique. In order to machine a job of any diameter and material most economically, stepless spindle speed is necessary. But from the considerations of rigidity, economy and ease of manufacture, the stepped drive is always preferred to the stepless one.

The spindle speeds may be arithmetically, geometrically or logarithmically stepped. With the stepped drive it will be necessary to establish upper and lower limits for the economic cutting speeds. A geometric progression for spindle speeds is accepted because it can handle a large diameter range for the same speed range and is superior from the design and kinematic aspects. Since the intermediate transmissions

are also stepped in geometric progression, it has the added advantage of providing easy calculations. The number of spindle speeds is kept as low as the economic handling of large numbers of diameters and materials allow. This requires a finely stepped feed drive which is more economical as compared to finely stepped spindle speeds. For a z - speed gear box, the common ratio Ø is obtained for a given speed range ratio B by the relation:

$$\phi^{z-1} = B \qquad (2.1)$$

where

$$B = \frac{\text{Maximum spindle speed}}{\text{Minimum spindle speed}}$$

Rewriting Eq. (2.1) in a different form

$$z - 1 = \frac{\log B}{\log \phi}$$

or

$$z = 1 + \frac{\log B}{\log \phi} \qquad (2.2)$$

Maximum and minimum spindle speeds and step ratio are not chosen arbitrarily. German Standards DIN 804 and DIN 805 provide standards for both spindle and feed speeds. These Standards are based on the fact that they cover the majority of economic cutting speeds depending upon the number of spindle speeds. The plot between B and z with constant Ø values is shown in Fig. 2.1. From the graph the designer can weigh up the various solutions at his disposal for economic selection of number of spindle speeds.

2.2 Layout Diagram:

If the number of spindle speeds z is split into K simple numbers then there are K groups of transmissions in the gear box. Each simple number represents a group and its magnitude indicates the number of transmissions from that group. For example, for a 24 speed gear box

$$z = 24 = 1\,[2] \,.\, 2\,[2] \,.\, 3\,[2] \,.\, 4\,[\;] \qquad (2.3)$$

Here there are four groups in the gear box with number of transmissions from each group as 2, 2, 2 and 3 respectively. The group arrangement shown in expression (2.3) conforms to standard practice.

Splitting of the spindle speed z may not always continue to the last prime number. It depends on the number of transmissions that the designer wants to allow in a group. As a matter of fact in obtaining the number of groups, if the factor "2" appears more than once, it should be combined to give four transmissions from one group instead of two transmissions from two groups. For example, for a 24-speed gear box the arrangement shown in expression (2.3) should be avoided. The obvious reason is the economy of space by saving a group. However, according to standard practice, the maximum number of transmissions from a group seldom exceeds 4 because in this case the shaft length increases with decreasing rigidity.

The total number of ways in which a layout diagram can be chosen is limited. If out of K groups D have equal number of transmissions, then the total number of layout diagram M is given by

$$M = \frac{K!\,K!}{D!} \tag{2.4}$$

For an 18 speed gear box, one of the possible arrangements is

$$z = 18 = 1\,[3] \,.\, 2\,[3] \,.\, 3\,[2]$$

Here the number of groups K is equal to 3, and number of groups D, having equal number of transmissions (1st and 2nd groups) is 2. Therefore, the total number of possible layout diagrams is

$$M = \frac{3!\,3!}{2!} = 18$$

Some of these 18 layout diagrams are shown in Fig. 2.2.

The above discussions about total number of layout diagrams are valid only when there is no back gear shaft at any stage of the gear box. Fig. 3.3 shows a back gear connection between the shafts of a gear box. The advantages of using back gears are twofold. Firstly, the transmission ratios which cannot be obtained by a single gear[1] pair can be obtained here. Secondly, if the nth shaft be the back gear shaft then the arrangement enables (n + 1)th shaft to have all the speeds of (n - 1)th shaft. This is done simply by direct coupling.

To incorporate the consistency in the group nomenclature for computer programme, two groups are considered whenever a back gear is present, as shown in Fig. 3.2, namely the groups containing the transmissions from (n - 1)th shaft to nth. shaft (back gear shaft) and from nth. shaft to (n + 1)th shaft.

It is only at the later stages (towards the spindle) that a back gear arrangement can be used with advantage because then they provide for increased number of speeds. In the presence of back gear shafts, total number of possible layout diagrams is difficult to determine.

The arrangements which have more than two transmissions in the last group(i.e. on the spindle) should be rejected because of excessive dynamic loading on the spindle. For example, for a 24 - speed gear box, arrangement, such as 24 = 1 [4] . 2 [2] . 3 [3] should be rejected. Number of transmissions from a group and their occurrence in the group order are factors which account for the size of the gear box. Group orders which have larger number of transmissions in the lower group (towards the 1st shaft) than in the higher are preferred. The gears in the lower groups are nearer to the motor shaft as compared to the gears in the higher group. Consequently, gears in the lower group run at comparatively higher speeds and transmit less torque. Therefore, they are smaller in size. So for compactness of the

gear box, more number of transmissions are incorporated in the lower groups. In certain exceptional cases this rule is violated. For example, when a designer has to select a layout diagram for 12 speed gear box, incorporating flexibility in the design to convert it to 18 speed gear box, with minimal change in the assembly, the following arrangement is preferred:

$$12 = 1\,[2] \,.\, 2\,[3] \,.\, 2\,[2]$$

In this by adding one more transmission to the first group it is converted to an 18 - speed gear box with following arrangement :

$$18 = 1\,[3] \,.\, 2\,[3] \,.\, 2\,[2]$$

Layout diagrams with smaller variation of speeds on the intermediate shafts are preferred. With such selections, a pair of gears in a group, which is optimally designed for lowest speed does not become much over designed for higher speeds of same shaft. It follows that if x_1, x_2, ... x_k be group characteristics from 1st to the kth group, they should satisfy the following inequality :

$$x_1 < x_2 < \cdots < x_k \qquad (2.5)$$

In some cases this inequality is violated. One such example is the use of two composite gears in the second group. In Appendix - 2 the arrangement where $x_1 > x_2$ is superior to the one where $x_1 < x_2$ is shown.

2.3 Number of gear pairs required:

At this stage, the total number of gears necessary to meet the speed requirement has to be decided upon. The number of gears in the transmission can be reduced by using composite gears, where one driven gear in a group acts like a driver gear for the next group. This arrangement results in increased centre distance but the number of gears is reduced.

A pair of gears can be connected either by clutches or by sliding the cluster gear on the splined shaft. The former is the constant - mesh - type arrangement which is more silent and can use helical gears but is expensive. The sliding block or cluster gear arrangement is used at high torque and is cheaper but noisier.

2.4 Inter - departmental activity:

The selection of intermediate shaft speeds is not unique. The selection has to be a compromise between various conflicting situations. Some of these are stated below.

(a) Speeds of the intermediate shafts should be as high as possible to reduce the torque on the shaft. Transmission ratios less than 0.25 and greater than 2.0 are seldom allowed.

(b) With high speed of gears the dynamic loading due to inaccuracy in the machine cut gears increases tremendously and, therefore, high quality gears have to be used. Pitch line velocity should not exceed 25 m/sec. in majority of machine tool gear drives.

(c) Bearing loading conditions favour lightly loaded high speed shafts than heavily loaded low speed ones. But then, if the speed is more, the gears are smaller in size and the load on the shaft increases.

(d) Final speeds of the spindle must maintain a 2% accuracy from their respective desired speeds.

It is evident that the sizes of components like gears, shafts, clutches depend upon the choice of the speed diagram. So the selection of a speed diagram is the vital decision an engineer has to take before proceeding further.

The choice of the best speed diagram depends upon any desired criterion of optimality. For most practical purposes economy should be the guide line. To get the most economical gear box all the factors that influence economic production, such as the dimensions of all members, their respective materials, the manufacturing time, the processes,

man and machine hours involved have to be considered. This becomes a formidable task. A simpler optimality criterion such as compactness greatly reduces the task of quantifying some of the above influencing elements.

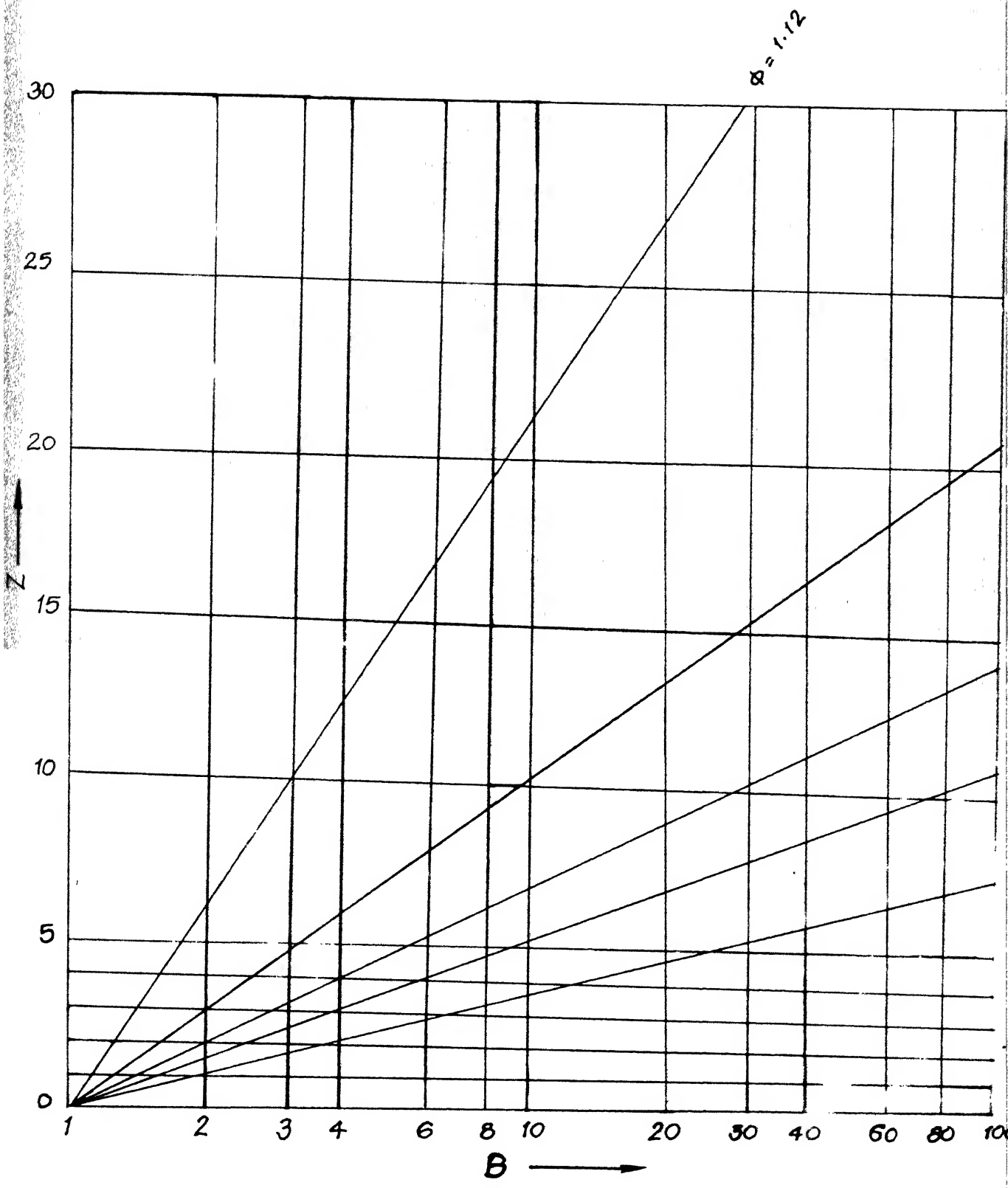

FIG. 2.1

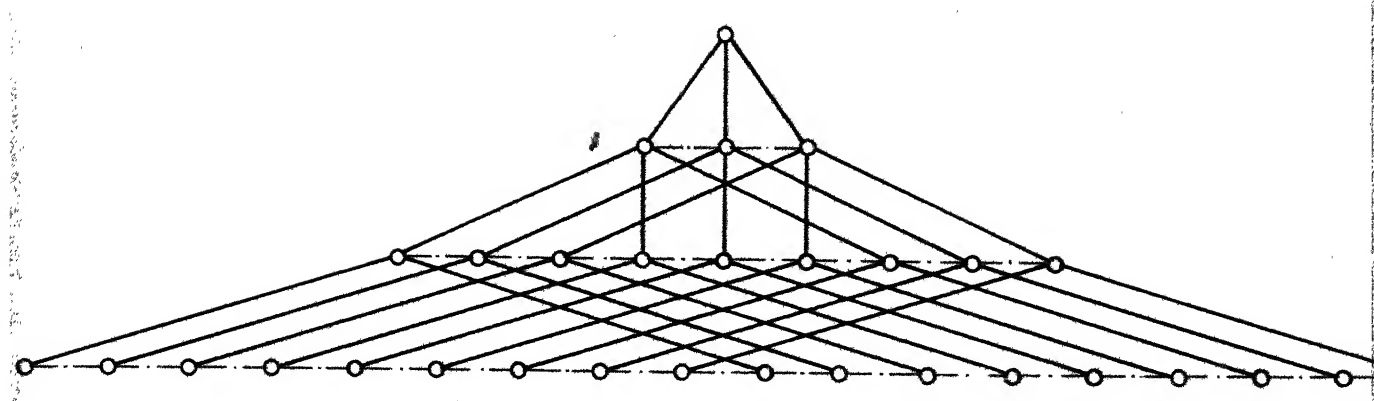

18 = 3.3.2

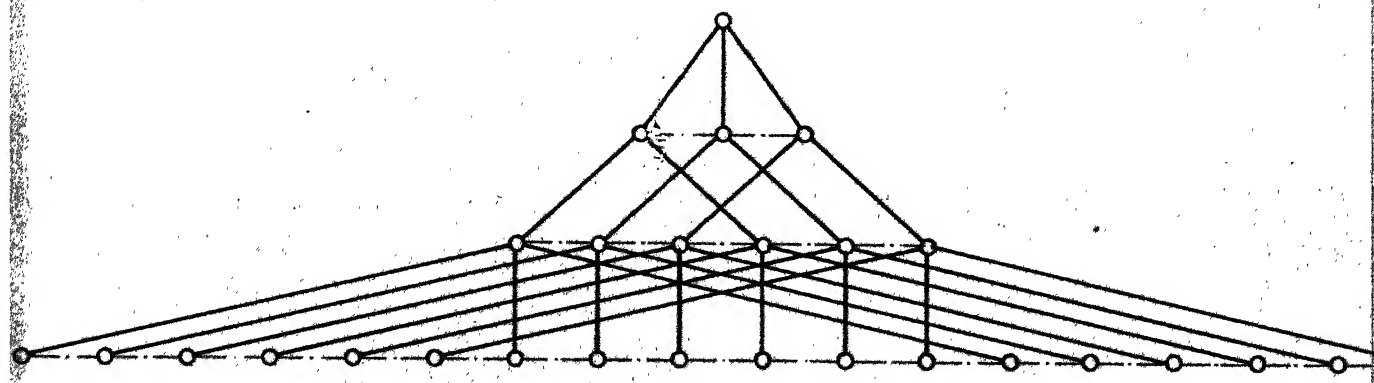

18 = 3.2.3

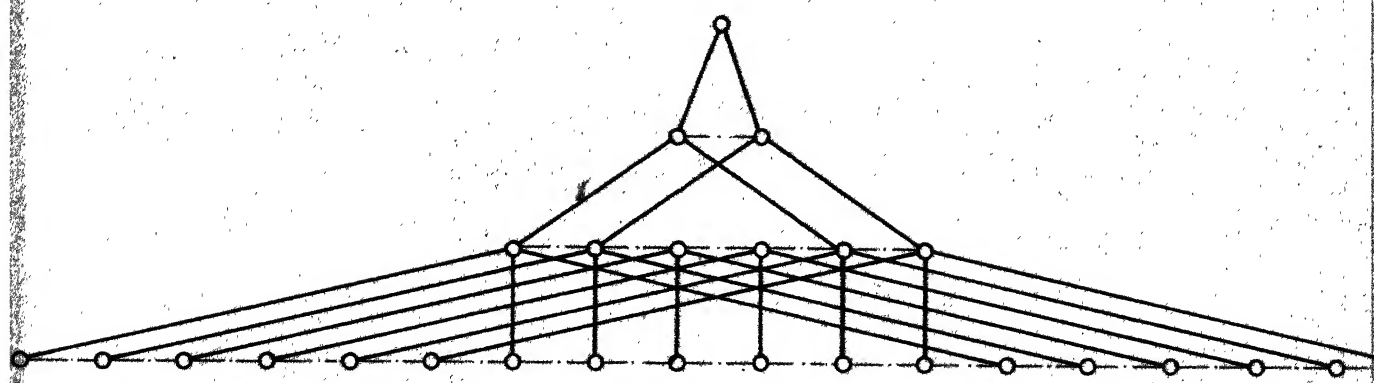

18 = 2.3.3

Fig.2.1

CHAPTER III

THE MATHEMATICAL FORMULATION

In this chapter, the design variables used in the mathematical modelling of the gear box are introduced and the objective function is formulated. The design constraints are expressed in the form of inequalities and a penalty function to account for the constraints is generated.

3.1 Design Variables:

Once the number of spindle speeds and that of groups are decided upon, an appropriate layout diagram remains to be chosen. The layout diagram indicates the number of speeds and the ratio between any two speeds of a shaft. Therefore, if the smallest (or any other) speed of a shaft is known all the other speeds of that shaft can be calculated. Given the input speed and the spindle speeds, lowest speed of intermediate shafts can be arrived at in such a fashion that lowest transmission ratios from all the groups meet the spindle speed requirements. These transmission ratios can be changed to give infinite number of altogether different speed diagrams for arriving at specified spindle speeds, thereby indicating that some of these are the independent design parameters.

As long as the teeth ratio is equal to the transmission ratio between two shafts, any number of teeth and module value for pinion and gear can be used for transmission

in that group containing the shafts. However, the gears must be of adequate strength to transmit the power to the spindle effectively. The transmission ratio between a pair of gears in a group, the number of teeth of the pinion and its module determine the centre distance between two shafts of that group. Therefore, whenever these quantities can be changed arbitrarily they form a set of independent design variables. If in some groups, the number of teeth of one of the pinions cannot be selected independently and the transmission ratio between two gears is not a free choice, then there is no independent design parameter in that group.

3.2 Nomenclature of Important Components:

The gears are named in double subscript, Z_{ij}. First subscript indicates the number of the shaft on which the gear is mounted and the second subscript indicates the number of the gear. A definite order is followed in the sequence of numbering the gears. The driver gears are numbered first in the order of increasing transmission ratios. Then the driven gears follow a similar order. Corresponding to every gear there is a notation for transmission ratio U_{ij}, modules m_{ij}, minimum speed S_{ij}, maximum speed T_{ij}, and composite gears L_{ij}. The jth speed of the ith shaft is denoted by R_{ij}. Some of the number of teeth, modules and transmission ratios are arbitrary choices (in the bounds of the design constraints) and are represented by a vector X of design

variables. The remaining are determined as their non - linear combinations.

3.3 Design Space:

If the number of independent variables in a particular configuration of a gear box is n, then the n-dimensional Eucledian space is known as the design space. Every point in this space represents a design even if it is absurd (as negative number of teeth or a gear digging into the other shaft). The movement from point to point in this space represents a change in design. Any point in the space is represented by a vector

$$X = \left[X_1, X_2, \ldots, X_n \right]^T \tag{3.1}$$

3.4 Constraint Surface:

All the points in the design space do not represent a feasible design. Each of the design requirements will be satisfied in some region of space and violated in the other. The surface that separates these two regions is called a constraint surface. Every design requirement has a corresponding constraint surface. The region of space in which all design requirements are satisfied is called the feasible region or the acceptable region.

Each of the constraints is represented by

$$g_i(\bar{X}) \geqslant 0 \quad , \quad i = 1, 2, \ldots N_c \tag{3.2}$$

where

N_c = number of constraints.

3.5 Objective Function

The function $f(\bar{X})$ of design variables, the value of which is a measure of the merit of the design and which must be optimised in the feasible region is called the objective function. The best feasible design is one for which

$$g_i(\bar{X}) \geqslant 0 \ , \ i = 1, 2, \ldots N_c \tag{3.3}$$

and

$f(\bar{X})$ is optimum.

In the present work the sum of the individual center distances is chosen as the optimality criterion.

The gear boxes can be divided into four general categories depending on their complexities. Gear boxes may have

1. No composite gear in any group.
2. One composite gear in a group
3. Two composite gears in a group
4. Back Gear at some stage.

There could be other classes as well, which can be deduced from the above categories.

The following factors are common to all types of gear boxes in objective function formulation.

1. The set of design variables $\{\bar{X}\}$ correspond to some of the elements in matrices $[Z_{ij}]$, $[m_{ij}]$, $[U_{ij}]$. Therefore any change in design variables is accompanied by a change in the corresponding elements in the matrices. The other elements of the matrices are combinations of design variables. Hence, they get modified every time the design vector is changed.

2. The objective function in all the cases is

$$f(\bar{X}) = \sum_{i=1}^{m} C_i \tag{3.4}$$

where

m = number of groups,

C_i = Center distance in the ith group

$$= \frac{Z_{i1} \cdot (U_{i1} + 1.0) \cdot m_{i1}}{2 \cdot U_{i1}}$$

3. Once the lowest transmission ratio from the ith group is known, the jth transmission ratio can be calculated as

$$U_{ij} = U_{i1} \cdot \phi^{(j-1).x_i} \tag{3.5}$$

where

x_i is the group characteristic of the ith group.

4. Every speed of the (i-1)th group generates as many as n_{i-1} speeds on the ith shaft, where n_{i-1} is the number of transmissions from the (i-1)th group. If N_{i-1} represents the number of speeds of (i-1)th shaft, then total number of speeds of ith shaft is

$$N_i = N_{i-1} \cdot n_{i-1}$$

The input shaft has only one speed R_{11}. The speeds of the second shaft are obtained by the relation

$$R_{2j} = R_{11} \cdot U_{1j} \ , \ j = 1, 2, \ldots n_1 \tag{3.6}$$

For every speed of second shaft, the speeds of the third shaft are given by

$$R_{3jk} = R_{2j} \cdot U_{1k}, \ k = 1, 2, \ldots n_2 \tag{3.7}$$

Evidently the minimum speed of the ith shaft is given by the relation

$$R_{i1} = R_{11} \cdot U_{11} \cdot U_{21} \cdots U_{i-1,1}$$

5. The number of teeth of all the gears in the ith group is determined if Z_{i1} and the transmission ratios U_{ij}, j = 1, 2, ... n_i are known. This is given as

$$Z_{ij} = \frac{Z_{i1} \cdot (1.0 + U_{i1}) \cdot U_{ij}}{U_{i1} \cdot (1.0 + U_{ij})} \ , \ j = 1, 2, \ldots n_i \tag{3.8}$$

6. In every case the lowest transmission ratio from the last group is not arbitrary. If m be the total number of

groups, then it follows from the equation 3.7

$$R_{m+1,1} = R_{11} \cdot U_{11} \cdot U_{21} \cdots U_{m-1,1} \cdot U_{m1}$$

Therefore,

$$U_{m1} = \frac{R_{m+1,1}}{R_{11} \cdot U_{11} \cdot U_{21} \cdots U_{m-1,1}} \tag{3.9}$$

where

$R_{m+1,1}$ is the lowest given spindle speed.

It follows that C_i's can be determined if U_{i1} , Z_{i1} and m_{i1} are known for the ith group. Methods of finding these quantities for every group changes from one configuration of the gear box to the other. Actually depending upon the configuration of the gear box, the number of independent design variables changes. This is discussed in the subsequent paragraphs for the earlier mentioned types.

Type 1: A four speed gear box with eight gears is shown in Fig. 3.1a. None of the gears in both the groups is a composite gear. For a given minimum speed R_{31} and the given input speed R_{11}, the minimum speed R_{21} of shaft 2 can assume any value by varying U_{11} arbitrarily and setting

$$U_{21} = \frac{R_{31}}{R_{11} \cdot U_{11}} \tag{3.10}$$

The gears Z_{11} and Z_{21} and their modules can also be arbitrarily chosen without affecting the compatibility. Therefore, the number of independent design variables in this case is 5.

Type 2 : The same 4 spindle speeds have been achieved by 7 gears in Fig. 3.1b by using one composite gear in the second group. In this case also, U_{11} can be arbitrarily varied and U_{21} is found from the Eq. 3.10. The number of teeth and module of Z_{11} in the first group can be chosen arbitrarily but the number of teeth and module in second group is not a free choice and is automatically determined from group 1. Therefore, the number of independent design variables reduces to 3 in this case.

Type 3 : Fig. 3.1c represents a gear box arrangement to reach the same four speeds of the spindle using only 6 gears. Both the driven gears of the first group are composite gears. It has been shown that once the number of teeth and module of Z_{11} are arbitrarily selected, all the numbers of teeth can be determined as a function of $\emptyset$, R_{31} and R_{11}. This means that there can be only one possible value of transmission ratio U_{11} for given R_{31}. Therefore,

the number of independent design variables reduces to 2.

The expression for U_{11} in this case is

$$U_{11} = \frac{1 - R_{41} \cdot \emptyset \cdot (\emptyset + 1)}{\emptyset} \qquad (3.11)$$

Type 4: Fig. 3.2a indicates the 4 speeds on the 4 shafts by a back gear arrangement. The centre distance between 2nd and 3rd is the same as centre distance between 3rd and 5th shaft. The arrangement uses 8 gears and its layout diagram is shown in Fig. 3.2b. The transmission U_{11} is not arbitrary because the speed R_{21} it generates on the second shaft is transferred to the 4th shaft directly by clutch and has to be one of the desired speeds. Any one of the transmission ratios U_{21} and U_{31} is arbitrary. Others are given by the relations

$$U_{11} = \frac{R_{43}}{R_{11}}$$

$$U_{31} = \frac{R_{41}}{R_{11} \cdot U_{11} \cdot U_{21}} \qquad (3.12)$$

The number of the teeth and module of Z_{11} and Z_{21} are arbitrary. Z_{31} can be written as

$$Z_{31} = \frac{C_3 - U_{31}}{(1.0 + U_{31}) \cdot m_{31}} \qquad (3.13)$$

where

$$C_3 = C_2$$
$$m_{31} = m_{21}$$

The number of design variables is, therefore, 5 in this case.

The discussion of the above four types has been included for the sake of completeness. The computer program by itself finds the number of design variables and evaluates the objective function for any of the above types of their combinations.

3.6 Normalised Constraints:

The general form of expression of design constraints is

$$g_1 (\bar{X}) \equiv 0.01 - f_1 (\bar{X}) \geqslant 0$$
$$g_2 (\bar{X}) \equiv f_2 (X) - 10{,}000 \geqslant 0$$

where it is required that

$$f_1 (\bar{X}) \leqslant 0.01$$
$$f_2 (\bar{X}) \geqslant 10{,}000$$

The above is an example where the magnitude and sensitivity of the two constraints with respect to change in design variable are quite different. This results in

difficulty to arrive at the optimum point efficiently. The disparity in magnitudes and sensitivities of the design constraints can be avoided by normalising them, i.e. by forcing them to take values between 0 and 1. If the inequality constraint expresses the difference between two variables, then it should be normalised with respect to the variable of greater value. Even when the magnitudes of the constraints are controlled, their sensitivities may vary widely. Nevertheless, normalising always improves the handling of constraints.

3.7 Equations of Constraint Surfaces:

It has been stated that the number of independent design variables and the number of gears required to obtain the desired spindle speeds vary with selection of layout diagram and the arrangement in gear box. Therefore, the total number of constraints is problem-dependent.

3.7.1 Positivity of Design Variables:

Negative values for the number of teeth, transmission and the modules of the gears are meaningless. To restrain the minimisation algorithm from going into this region of design space, positivity constraints are added.

$$g_i(\bar{X}) = \frac{X_i - (X_{min})_i}{(X_{max})_i - (X_{min})_i} \geqslant 0 \;.\; i = 1,2,\ldots, n \tag{3.14}$$

where

n = Number of independent variables,

X_i = i^{th} design variable,

$(X_{min})_i$ = Minimum value of ith design variable,

$(X_{max})_i$ = Maximum value of ith design variable.

3.7.2 Gear Teeth:

The minimum number of teeth of a gear blank should not be less than 14 in order to avoid excessive undercutting. This constraint is applied to all the gears in the drive and is expressed as

$$g_i(\bar{X}) = 1.0 - \frac{14.0}{Z_j} \geqslant 0, \; j = 1, 2, \ldots N_g \quad i = n+1, n+2, \ldots n+N_g \tag{3.15}$$

3.7.3 Pitch Line Velocity:

The dynamic loading of a machine-cut gear increases tremendously with the increase in pitch line velocity Q_i of the gear. The r.p.m. in calculation of Q_i is obtained from the speed diagram.

$$Q_i = \frac{Z_i \cdot m_i \cdot T_i}{20,000}, \; i = 1, 2, \ldots N_g \tag{3.16}$$

The corresponding constraint equations are

$$g_i(X_-) = 1.0 - \frac{Q_j}{25.0} \geqslant 0 \quad j = 1,2, \ldots N_g \quad i = n+N_g+1, \ldots N+2N_g \tag{3.17}$$

3.7.4 Wear Strength:

All the gears in the drive should be checked for bending and wear at rated horse power of the gear box. In view of the fact that amongst different types of gear failures, failure due to wear is most common, it is sufficient to check for the wear strength of the gears only. The expression for the horse power capacity in wear of a gear teeth is given by

$$(H.P.)_{wear} = X_c \cdot Y_z \cdot S_c \cdot b \cdot m^{1.8} \cdot S \cdot z \cdot \frac{1.3}{10^6} \tag{3.18}$$

where

X_c = Speed Factor,

Y_z = Zone Factor,

S_c = Service Factor,

b = Face width of gear

S = Speed of rotation

m = Module, and

z = Number of teeth.

The speed factor X_c is a function of r.p.m., s and the number of working hours per day, H. This has been represented in a graph for different speeds and working hours in I.S. 4460-67. Empirical relationship is established here through the use of minimum deviation technique, and values of X_c are obtained upto 1% accuracy from the relation

$$X_c = S^{-0.185} \, e^{\left[0.8442(H - 0.821)^{0.218} - 1.385\right]} \tag{3.19}$$

The zone factor Y_z is a function of number of teeth of the driver gear, Z_p and of the driven gear, Z_g. This has been obtained from I.S. 4460-67 by interpolation.

$$Y_z = A + B\,Z_g + C\,Z_g^2 \qquad (3.20)$$

where

$$A = -1.3 + 0.0294\,Z_p + 0.000169\,Z_p^2$$

$$B = 0.222 - 0.00204\,Z_p + 0.0000115\,Z_p^2$$

$$C = -0.00461 + 0.0000653\,Z_p + 0.0000003\,Z_p^2$$

The service factor S_c is defined for different combinations of materials for gear and pinion. The value here is taken as 1.125 for 0.4% Carbon Steel.

The series of constraints g_i's are written as

$$g_i\,(\ ) = 1.0 - \frac{H.P}{(H.P.\ wear)_j} \geq 0,\ j = 1,2,\ \ldots\ N_g \qquad (3.21)$$
$$i = n+2N_g+1, \ldots n+3N_g$$

3.7.5 Minimum Gear Blank Size

Diameter of bore of the gear should be atleast 2.35 times less than the pitch diameter to provide for sufficient strength of the annular portion left in the gear. To account for keys, a further factor of safety of 1.25 is required. Therefore, maximum allowable bore diameter D_i in the ith gear blank is given by

$$D_i = \frac{Z_i \cdot m_i - 2.35 \cdot m_i}{1.25} \qquad (3.22)$$

or

$$D_i = 0.8 \cdot m_i \, (Z_i - 2.35)$$

and the corresponding constraint equations are

$$g_i \, (\bar{X}) = 1.0 - \frac{(dia)_j}{D_j} \geqslant 0, \; j = 1, 2, \ldots N_g \qquad (3.23)$$
$$i = n+3N_g+1, \ldots n+4N_g$$

where

$(dia)_j$ is the shaft diameter holding the ith gear.

3.7.6 Modules:

The modules of gears in most generally used machine tools vary from a lower limit of 1.75 to an upper limit of 10.0. This presents 2 x m number of constraints where m is the number of groups in the drive.

$$g_i \, (\bar{X}) = 1.0 - \frac{1.75}{m_j} \geqslant 0, \; j = 1,2, \ldots, m \qquad (3.24)$$
$$i = n+4N_g+1, \ldots n+4N_g+m$$

and

$$g_i \, (\bar{X}) = 1.0 - \frac{m_j}{10.0} \geqslant 0, \; j = 1,2, \ldots m \qquad (3.25)$$
$$i = n+4N_g+m+1, \ldots n+4N_g+2m$$

3.7.7 Transmission Ratio:

There are constraints on the minimum and maximum values of transmission ratio from a group. Low transmission ratios lead to excessively big gears. Designers recommend

the upper and lower values of transmission ratios as 2.0 and 0.25 respectively. This also adds 2 x m more number of constraints to the problem. These are written as

$$g_i\ (\bar{X}) = 1.0 - \frac{0.25}{U_{j1}} \geqslant 0,\ j = 1,2,\ \ldots\ m \qquad (3.26)$$

$$i = n+4N_g+2m+1, \ldots n+4N_g+3m$$

and

$$g_i\ (\bar{X}) = 1.0 - \frac{U_{j1} \cdot \phi^{(N_j - 1)} \cdot x_j}{2.0} \geqslant 0\ ,$$

$$j = 1,2,\ \ldots\ m \qquad (3.27)$$

$$i = n+4N_g+2m+1,\ \ldots, N+4N_g+3m$$

where

N_j = the number of transmission ratios from the jth group,

X_j = the group characteristics.

3.8 Solution Scheme:

The object is to minimise f $(\bar{X})$ subject to the N_c constraints. The constraint list is far from being exhaustive. Even with these limited constraints, the solution becomes a formidable task because :

a) The number of teeth on each gear must be an integer i.e. it could be 34 or 35 but never 34.67.

b) The availability of cutters restrict the usage of standard modules. This is a situation where some of the variables can only take predetermined values.

These conditions make the formulation that of a Nonlinear Problem with Integer and Real Variables. Some solutions for pure linear integer programming problems have been obtained but the nonlinear part is still unexplored.

The only feasible remedy for this impasse seems in floating the variables. After reaching the minima by any of the existing techniques the variables are given their next higher integer values. But this method is also not free of faults. The final variables must satisfy all the constraints. Depending on whether the module value is made higher or lower to achieve the next standard value, the number of teeth of corresponding gears should be lowered or raised respectively. This transformation of variables also requires that the compatibility criterion is satisfied (i.e. the total number of teeth for any two pairs of mating gears between the two shafts must be the same). Even now, the possible combination which yields the minimum centre distance may not be acceptable. The output speed at the spindle must not differ by more than two per cent from the required speed. Since the rounding-off of the teeth yields a change in the transmission ratio, there is a consequent change in the output speeds. But these may not be as difficult as they appear to be. Because of the finite number of design variables, the simplest method could be to check every possible combination by fixing the range for each variable around the mean value found and always

checking all the constraints. That which leads to minimum centre distance amongst the acceptable combinations is the best speed diagram arrangement.

3.9 Penalty Function:

The problem is converted to one of the unconstrained minimisations by generating a function $P(\bar{X})$ of the design variables such that

$$P(\bar{X}) = f(\bar{X}) + r \sum_{i=1}^{N_c} \frac{1}{g_i(\bar{X})} \qquad (3.28)$$

At any constraint surface i, $g_i(\bar{X})$ reaches zero thereby shooting up the values of total function $P(\bar{X})$. The function $P(\bar{X})$ is given as high value as 10^{30} in case any of the constraints is violated. This helps in identifying the situation that one or more constraints are violated. In the algorithm, the solution then starts from the previous feasible design.

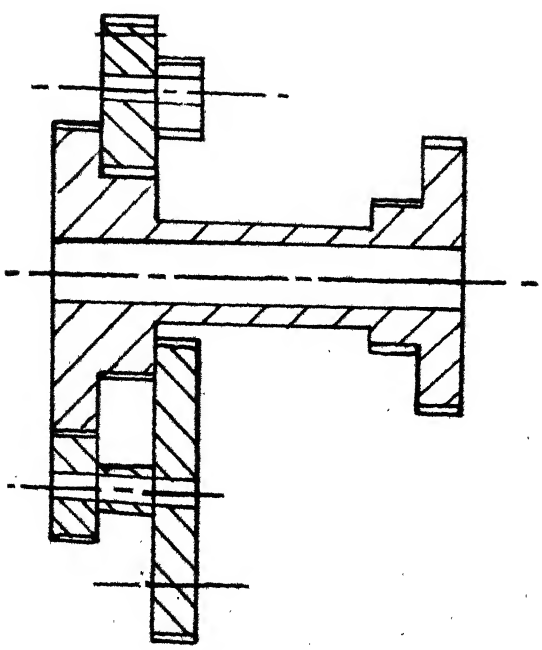

. NO COMPOSITE GEAR

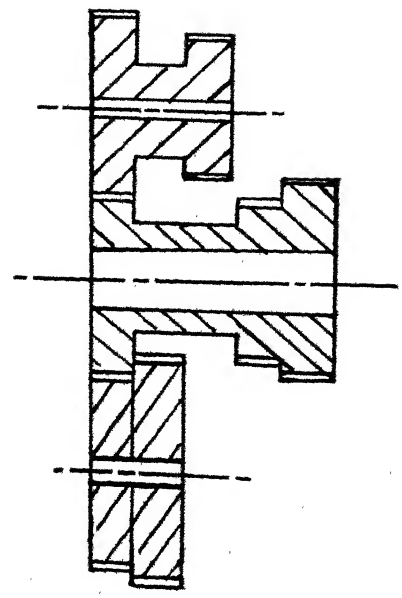

b. ONE COMPOSITE GEAR

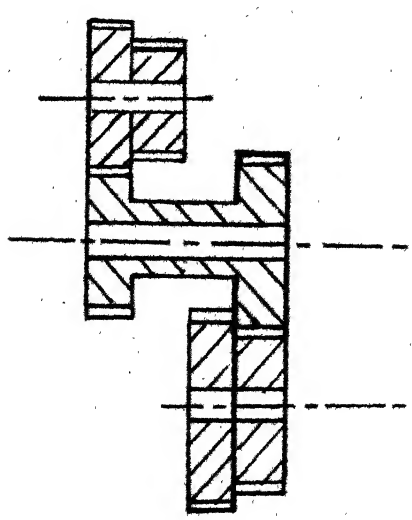

c. TWO COMPOSITE GEARS

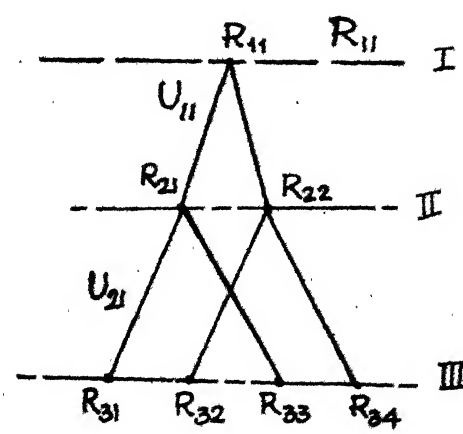

d. SPEED DIAGRAM

FIG 3.1

a. BACK-GEAR SHAFT ARRANGEMENT

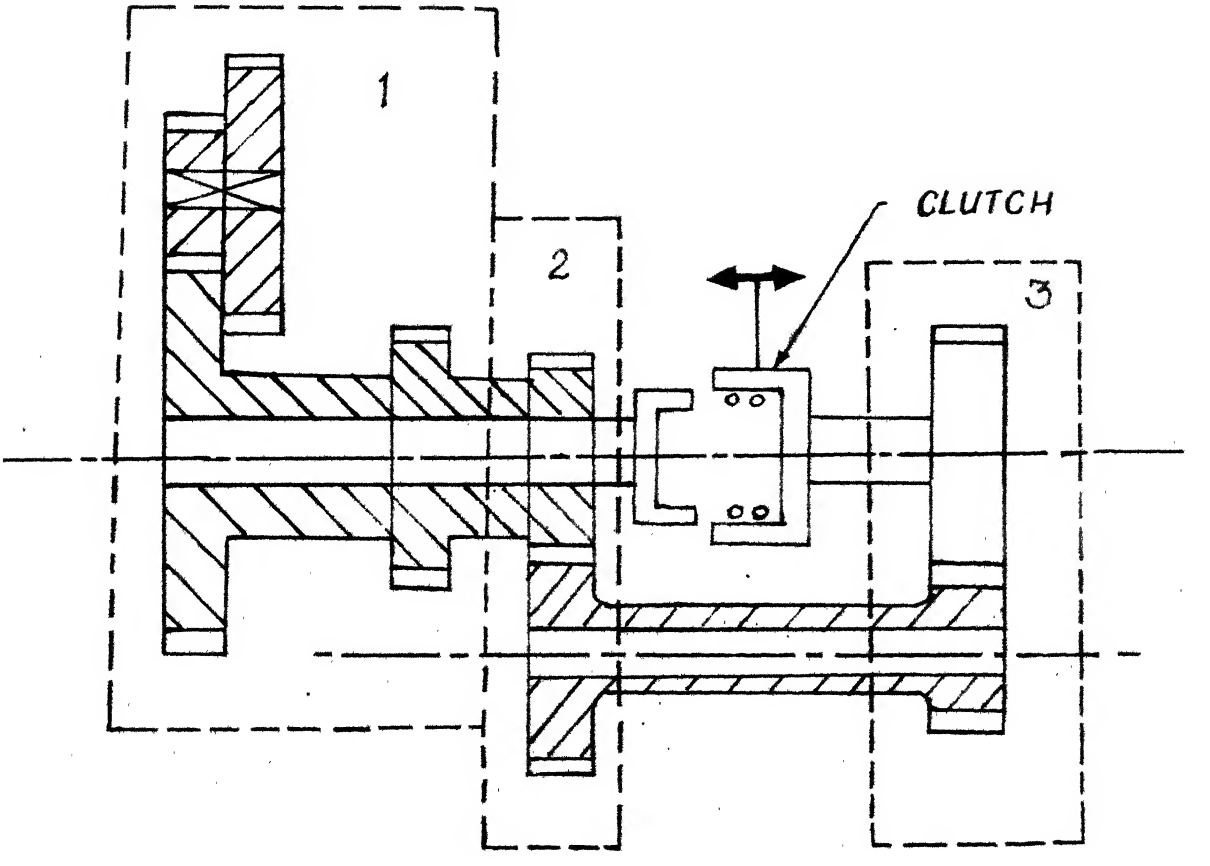

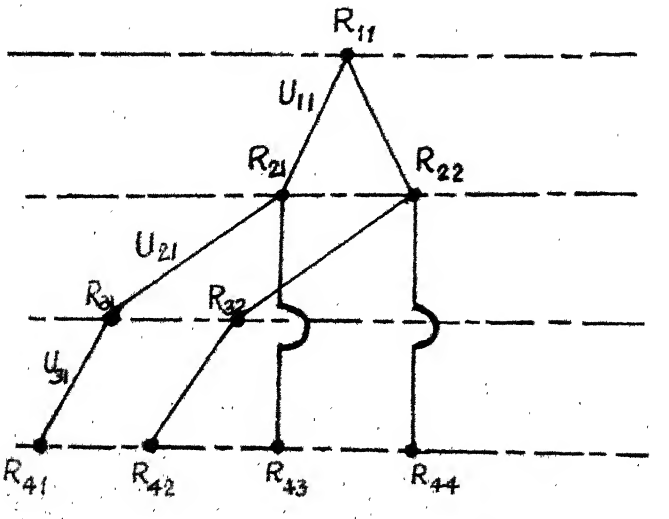

b. SPEED DIAGRAM

CHAPTER 4

THE SOLUTION ALGORITHM

The technique employed in the solution of the foregoing constrained minimisation problem is discussed in this chapter. The constrained problem is first converted to an unconstrained minimisation problem and is then solved as a sequence of unconstrained problems.

4.1 Conditions for Minimum :

Necessary and sufficient conditions for a minimum of a function $f(\bar{X})$ of n variables is that there exists $\bar{X}^*$ for which

$$f(\bar{X}^*) < f(\bar{X}) \tag{4.1}$$

for all $\bar{X}$. If the inequality holds in some neighbourhood of $\bar{X}^*$ then the function is said to have a local or relative minima at that point.

The necessary conditions for the relative minimum are

$$\frac{\partial f}{\partial x_i} = 0 \qquad , i = 1, 2, \ldots , n \tag{4.2}$$

The set of nonlinear simultaneous equations, thus obtained, are not easy to solve. Further, even if the above set could be solved there would be no guarantee that the obtained solution is not a maximum or saddle point rather than a minimum.

One way to overcome this difficulty is to reduce the constrained minimisation problem to an unconstrained minimisation problem.

4.2 Conversion to Unconstrained Minimisation :

A constrained optimisation problem can be cast as a Mathematical Programming problem in the form :

$$\min f(\bar{X})$$

subject to

$$g_j(\bar{X}) \geqslant 0, \qquad j = 1, 2, \ldots N_c$$

where $\bar{X}$ is an n-dimensional vector of design variables X_i, $i = 1, 2, \ldots n$ and $g_j(\bar{X})$ are the given constraints on the design. The function $f(\bar{X})$ is called the objective function and its choice is governed by the nature of the problem.

The constrained minimisation problem is converted to an unconstrained minimisation problem as follows :

$$P(\bar{X}, r) = f(\bar{X}) + r \sum_{i=1}^{N_c} \frac{1}{g_i(X)} \qquad (4.4)$$

where $P(\bar{X}, r)$ is the penalty function and r is an arbitrary penalty parameter which in the limit goes to zero.

The minimisation proceeds over a strictly monotonically decreasing sequence of r - values from an initial

design vector $\bar{X}_o$ essentially inside the boundary of the constraints and for a positive value of r, say r_1. The minimum of $P(\bar{X}, r_1)$ must lie inside the constraint set because at the boundary some of the $g_i(\bar{X})$ tends to zero and consequently $P(\bar{X})$ tends to infinity. The minimum of $P(\bar{X}, r_1)$ depends on r_1, the starting value of r, and can be written as $\bar{X}(r_1)$. By reducing r_1 in the next iteration, the summation term which penalises for the closeness to the constraint boundaries is reduced and hence in minimising $P(\bar{X}, r)$ more emphasis is placed on $f(\bar{X})$. The method has special advantages of not following the zig-zag pattern of minimisation (Fig. 4.1) as is observed with other nonlinear programming algorithms. This is because the minimisation starts from within and does not follow the boundary.

Fiacco and McCormick[12] have shown that if

(1) the interior of the constraint set is non empty,

(2) the functions $f(\bar{X})$ and $g_i(\bar{X})$, $i = 1, \ldots N_c$ are twice continuously differentiable,

(3) the set of points in the constraint set for which $f(\bar{X}) \leqslant v_0$ is bounded for every finite v_o, and

(4) the function $f(\bar{X})$ is bounded below for $\bar{X}$ in the constraint set

then, the optimal solution to the unconstrained problem approaches a local minimum of the

constrained problem as the value of r approaches zero. If, in addition,

(5) $f(\bar{X})$ and $-g_i(\bar{X})$, $i \quad 1, 2, \ldots, N_c$ are convex functions, and

(6) $P(\bar{X}, r)$ is strictly convex in the interior of the constraint set for every $r > 0$,

then the optimum solution to the unconstrained minimisation problem approaches the absolute minimum of the constrained problem as r approaches zero.

4.3 Choice of Initial r :

To start the algorithm the first decision is to be taken about the value of r and the factor C, the factor by which the values of r shall be decreased. The algorithm imposes no restriction on the values of r and C except that $r > 0$ and $C > 1$. With large r - values the number of computations required to reach the constrained minimum increases tremendously while with small value of r, the function is highly distorted and requires initial solution very close to actual minima.[11]

Two methods to choose the initial value of r have been suggested in the literature.

(1) $$r_1 = \frac{f(\bar{X}_o)^T \cdot p(\bar{X}_o)}{\left| p(\bar{X}_o) \right|^2} \qquad (4.5)$$

where

$$p(\bar{X}_o) = \sum_{i=1}^{N_c} \frac{1.0}{g_i(\bar{X}_o)}$$

and represents the gradient of the function.

Case I : $r_1 < 0$

If $r_1 < 0$, minimisation of $f(\bar{X}_o)$ alone, without considering the penalty term, is carried out. At every new point the r-value is checked by equation 4.5. If the value is positive, unconstrained minimisation with obtained value of r is carried out.

Case II : $r_1 = 0$

This means that the unconstrained minimum has been reached and $\bar{X}_o = \bar{X}^*$

Case III : $r_1 > 0$

If $r_1 > 0$, this is taken as the starting value for usual minimisation.

(2) That value of r_1 is selected which makes the objective function and penalty term equal that is,

$$r_1 = \frac{f(\bar{X}_o)}{\sum_{i=1}^{N_c} \frac{1.0}{g_i(\bar{X})}} \qquad (4.6)$$

This has two weaknesses. Firstly, the starting point may be too close to some of the boundaries thereby making such selection of r useless. Secondly, there may not even be a point in the feasible domain which is not near a constraint boundary. If some of the constraints are near the boundary, i.e. penalty is large the value of r obtained from equation (4.6) is very small. This difficulty is eliminated if in the summation for penalty those constraints which are quite close to the boundary are substituted by some minimum value of constraint. Modified expression for r_1 is

$$r_1 = \frac{\left| f(\bar{X}_o) \right|}{\sum_{i=1}^{N_c} \frac{1}{\left[\text{Min } g_i(\bar{X}_o), g_{min}\right]}} \tag{4.7}$$

Since the constraints are normalised here, the value of g_{min} can be arbitrarily selected as 0.2.

4.4 Extrapolation:

The vectors $\bar{X}(r_1)$, $\bar{X}(r_2)$ ..., $\bar{X}(r_k)$ obtained by minimising $P(\bar{X}, r)$ over decreasing sequence of r - values lie on a trajectory $\bar{X}(r)$, where $\bar{X}(0)$ is the desired solution. From this trajectory, it is possible to obtain, by extrapolation, estimates of final solution $\bar{X}(0)$ and the next minimum $\bar{X}(r_{k+1})$.

It has been shown that the trajectory approximates the polynomial of $r^{\frac{1}{2}}$.[8] This is because as r tends to zero, the function behaves as a linear function of $r^{\frac{1}{2}}$. The approximating function is defined as

$$\bar{X}(r) = a_o + a_1 r^{\frac{1}{2}} + a_2 r + \dots + a_{k-1} r^{(k-1)/2} \tag{4.8}$$

where

a_i's are the undetermined coefficients.

For small values of r

$$\bar{X}(r) \quad \bar{X}(0) + a\sqrt{r} \tag{4.9}$$

Solving these for X (0)

$$\bar{X}(0) = \frac{\sqrt{C}\,\bar{X}(r/c) - \bar{X}(r)}{\sqrt{C} - 1} \tag{4.10}$$

An estimate of minimum point for next r - value is obtained by assuming that

$$\bar{X}(r/C^2) \quad \bar{X}(0) + a\sqrt{r/C^2} \tag{4.11}$$

Solving equations (4.10) and (4.11) for $\bar{X}(r/C^2)$

$$\bar{X}(r/C^2) = \bar{X}(r/C) + \frac{1}{\sqrt{C}} \quad \bar{X}(r/C) - \bar{X}(r) \tag{4.12}$$

This value of X can be used for the next minimisation, thereby substantially reducing the effort for minimisation of P ($\bar{X}$).

However, these extrapolated values have to be first checked so that they do not violate the constraints. Estimates of $\bar{X}$ (0) become reasonably good after three or four trials, and, towards the end offer more accurate estimation of values of $\bar{X}$ (0).

4.5 Method of Unconstrained Minimisation :
(Variable Metric Method of Fletcher and Powell)

The method is based on the properties of a quadratic function and is designed so that when applied to a quadratic, it minimises the function (of n variables) in n iterations.

Central to the method is a symmetric positive definite matrix $[H_i]$ which is updated at each iteration. It collects in itself the information about the curvature of the function P $(\bar{X})$ and supplies the current direction of move d_i by multiplying it with current gradient vector.

A typical iteration in the minimisation of f $(\bar{X})$ proceeds as follows :

(1) given the starting point $\bar{X}_i$ and the gradient of P $(\bar{X})$ at $\bar{X}_i$, $\bar{d}_i$ (X), the direction of (i + 1)th minimisation of P $(\bar{X})$ is given by

$$\bar{d}_i = - [H_i] \cdot G_i \qquad (4.13)$$

(2) find σ_i^* so that $f(\bar{X}_i + \sigma_i^* d_i)$ is minimum along the line $\bar{d}_i$.

(3) set $\bar{X}_{i+1} = \bar{X}_i + \sigma_i^* d_i$

(4) calculate the new gradient vector

$$\bar{G}_{i+1} = \nabla P(\bar{X}_{i+1})$$

and set

$$\bar{Y}_i = \bar{G}_{i+1} - \bar{G}_i$$

(5) calculate the new $[H]$ matrix, $[H_{i+1}]$ by

$$[H_{i+1}] = [H_i] + \sigma_i^* \frac{\bar{d}_i \bar{d}_i^T}{\bar{d}_i^T \bar{Y}_i} - \frac{[H_i] \bar{Y}_i \bar{Y}_i^T [H_i]}{\bar{Y}_i^T [H_i] \bar{Y}_i} \tag{4.14}$$

(6) begin the next iteration from (1).

It can be shown in the case of a quadratic function that matrix $[H_i]$ converges to the inverse of the matrix of second partial derivatives of the quadratic after n iterations. In case of a general function, $[H_i]$ tends to the inverse of the matrix of second partials of the function evaluated at the minimum. This is because as the minimum is approached the second order term in Taylor series predominates.

If during any iteration the minimum is not found along $\bar{d}_i$ then H_i is not modified in the next iteration. The new direction is calculated from equation (4.13) using $\bar{G}_{i+1}$

and $[H_i]$. If at any step $[H]$ is no longer found to be positive definite then it is reset to unity. The positive definiteness[13] at point $\bar{X}_i$ is tested by evaluating $\bar{X}_i^T [H_i] \bar{X}_i$. If this is positive then $[H_i]$ is positive definite.

4.6 The Gradient:

At every iteration the gradient has to be calculated in the minimisation algorithm. It can best be determined by writing down the exact derivatives of $P(\bar{X})$ with respect to the design variables. But, as in the present problem, both the number of design variables n and the number of constraints depend on the problem, one cannot arrive at a general analytical expression for the gradients. Moreover even in a moderately complex engineering problem, the analytical gradient calculation is very cumbersome. Gradients are therefore approximated by the difference technique.

The gradient of the function $P(\bar{X})$ with respect to the design variables is given by

$$G(\bar{X}) = \nabla P(\bar{X}) = \left(\frac{\partial P}{\partial X_1}, \frac{\partial P}{\partial X_2}, \ldots, \frac{\partial P}{\partial X_n} \right)^T \tag{4.15}$$

It may also be written as

I.I.T. KANPUR
CENTRAL LIBRARY
Acc. No. A 54874.

$$P(\bar{X}) = \left(\frac{\partial f}{\partial X_1} - r \sum_{i=1}^{N_c} \frac{1}{g_i^2} \cdot \frac{\partial g_i}{\partial X_1} \right), \ldots,$$

$$\left(\frac{\partial f}{\partial X_n} - r \sum_{i=1}^{N_c} \frac{1}{g_i^2} \cdot \frac{\partial g_i}{\partial X_n} \right) \qquad (4.16)$$

Expanding the function F (X) of one variable about X_o by Taylor Series

$$F(X_1) = F(X_0) + \left(\frac{dF}{dX} \right)\Big|_{X_0} \cdot (X_1 - X_0) +$$

$$\frac{1}{2} \left(\frac{d^2F}{dX^2} \right)\Big|_{X_0} (X_1 - X_0)^2 + \ldots \qquad (4.17)$$

neglecting the higher order terms

$$\frac{dF}{dX}\Big|_{X_0} = \frac{F(X_1) - F(X_0)}{(X_1 - X_0)} \qquad (4.18)$$

Close to the minimum, the function P ($\bar{X}$) has very large curvature indicating significant values for the second and third derivatives which have been neglected in the forward difference scheme. Even if g ($\bar{X}$) and f ($\bar{X}$) are nonlinear, still they are quite well behaved as compared to P ($\bar{X}$) at any point inside the domain. Thus, the gradient from the equation 4.16 should be used.

4.7 Linear Minimisation

In step 2 of the Fletcher and Powell method it is essential to find $\sigma_1 = \sigma^*$ for which P ($\bar{X}_i + \sigma^* \bar{d}_i$) is minimum.

If $\bar{X}_i$ and $\bar{d}_i$ at particular i are taken to be constant then $P(\bar{X}_i + \sigma \bar{d}_i)$ is a function of σ alone.

$$P(\bar{X}_i + \sigma \bar{d}_i) = \psi(\sigma) \tag{4.19}$$

Approximating the function $\psi(\sigma)$ by a cubic as shown in Fig. 4.2 the minimum of $\psi(\sigma)$ can be approximated by σ^* in the following way.

1. The initial step size is computed as

$$\sigma_1 = \text{Min}\left[1.0, \frac{-2\left[P(\bar{X}_i) - \psi_{min}\right]}{\psi'^T(\sigma) \cdot \bar{d}_i}\right] \tag{4.20}$$

   where ψ_{min} is the lower estimate of the function $f(\bar{X})$. It is usually assumed that in each minimisation the function value will reduce by 5 to 10 percent.

2. Evaluate

$$\psi'(\sigma_i) = \bar{d}_i^T \nabla P(\bar{X}_i + \alpha_i \bar{d}_i) \text{ at the points,}$$

$$\alpha_i = 0, \sigma_1, 2\sigma_1, 4\sigma_1, \ldots, a, b.$$

   where b is the first of these values at which ψ' becomes non-negative or ψ has not decreased and a is the point preceding b.

3. A cubic polynomial( ) is now fitted to the four values of $\psi(a)$, $\psi'(a)$, $\psi(b)$, and $\psi'(b)$. Its minimum is taken as σ^*.

$$\sigma_e = b - \left(\frac{\psi(b) + W - Z}{\psi(b) - \psi(a) + 2W} \right) \cdot (b - a) \tag{4.21}$$

where

$$Z = 3 \left[\frac{\psi(a) - \psi(b)}{(b - a)} \right] + \psi'(a) + \psi'(b)$$

$$W = \left[Z^2 - \psi'(a) \cdot \psi'(b) \right]^{\frac{1}{2}}$$

If $\psi(\sigma_e)$ is less than $\psi(a)$ and $\psi(b)$, σ_e is accepted as σ^*. Otherwise, depending on whether $\psi'(\sigma_e)$ is positive or negative, the interpolation is repeated over the sub interval (a, σ_e) or (σ_e, b) respectively.

At $\sigma_e = \sigma^*$, $\psi'(\sigma) = 0$ which means that the direction of the new gradient is orthogonal to the previous direction. Even if the check

$$\cos \lambda \leqslant 0.1$$

where,

$$\cos \lambda = \frac{\bar{G}_{i+1} \cdot \bar{d}_k}{\bar{G}_{i+1} \cdot \bar{d}_i}$$

is satisfied,

$\sigma^* = \sigma_e$ is accepted and the Hessian matrix is modified in the next iteration.

4.8 Slope in $\bar{d}$ Direction:

In one dimensional minimisation of $P(\bar{X})$, slope in the direction d is required. This can be obtained in two ways:

1. By taking dot product of the vector $\bar{d}$ and $\bar{G}$ at the point

$$\psi' = \bar{d}^T \cdot \bar{G} \tag{4.22}$$

2. By taking finite difference in $\bar{d}$ direction.

In the first method, to calculate the gradient, it is essential to evaluate the function value n times. Where as, in the second method only one computation of the function is necessary for the forward difference scheme. Therefore, the second method has been preferred here.

The forward difference scheme in the $\bar{d}$ direction is as follows

$$\bar{X}_i^+ = \bar{X}_i + \epsilon \cdot \bar{d}_i$$

where ϵ is a small step in $\bar{d}$ direction.

The slope $\psi'(\sigma)$ in $\bar{d}$ direction is then

$$\psi' = \frac{d\psi(\sigma)}{d\epsilon} = \frac{df(\bar{X})}{d\epsilon} - r \sum_{i=1}^{N_c} \frac{dg_i}{d\epsilon} \frac{1}{g^2} \tag{4.23}$$

where

$$\frac{df(\bar{X})}{d\epsilon} = \frac{f(\bar{X}^+) - f(\bar{X})}{\epsilon}$$

$$\frac{dg_i}{d\epsilon} = \frac{g_i(\bar{X}^+) - g_i(\bar{X})}{\epsilon}$$

4.9 Convergence Criteria:

The following are the convergence criteria used in the algorithm at various stages.

1. For one dimensional minimisation

a) $$\left| \frac{\bar{d}^T \cdot \bar{G}}{|\bar{d}| \cdot |\bar{G}|} \right| < \epsilon_{S1} \tag{4.24}$$

where ϵ_{S1} is the cosine of angle between $\bar{d}$ and $\bar{G}$.

b) the percent change in the function is less than specified tolerance

$$\left| \frac{f(X^+) - f(X)}{f(\bar{X})} \right| \leqslant \epsilon_{S_2} \tag{4.25}$$

2. For minimisation for a particular r

a) when the approximation for the percentage change in P $(\bar{X})$ in the next iteration has become less than a certain pre-assigned value

$$\left| \frac{\bar{G}\,[H]\,\bar{G}}{P(\bar{X})} \right| \leqslant \epsilon_{m_1} \tag{4.26}$$

b) another criterion to stop the iterations for a particular r is when n/2 consecutive one dimensional minimisations have yielded σ^* (step in $\bar{d}$ direction) less than one percent of the smallest value of the design variables.

3. For the constrained minimum

a) when the percentage change in the objective function between minima corresponding to two consecutive r values is less than the given tolerance, that is

$$\left| \frac{f_{min}(\bar{X}, r-1) - f_{min}(\bar{X}, r)}{f_{min}(r)} \right| \leqslant \epsilon_{U_2} \tag{4.27}$$

b) when the minimum percentage change in any design variable corresponding to two consecutive minimum r values is less than the given tolerance

$$\left| \frac{X_i(r.C) - X_i(r)}{X_i(r)} \right| \leqslant \epsilon_m \tag{4.28}$$

c) when the percentage change in the extrapolated function value f (0) is less than the given tolerance.

$$\left| \frac{f(0) - f(r)}{f(r)} \right| \leqslant \epsilon_r \tag{4.29}$$

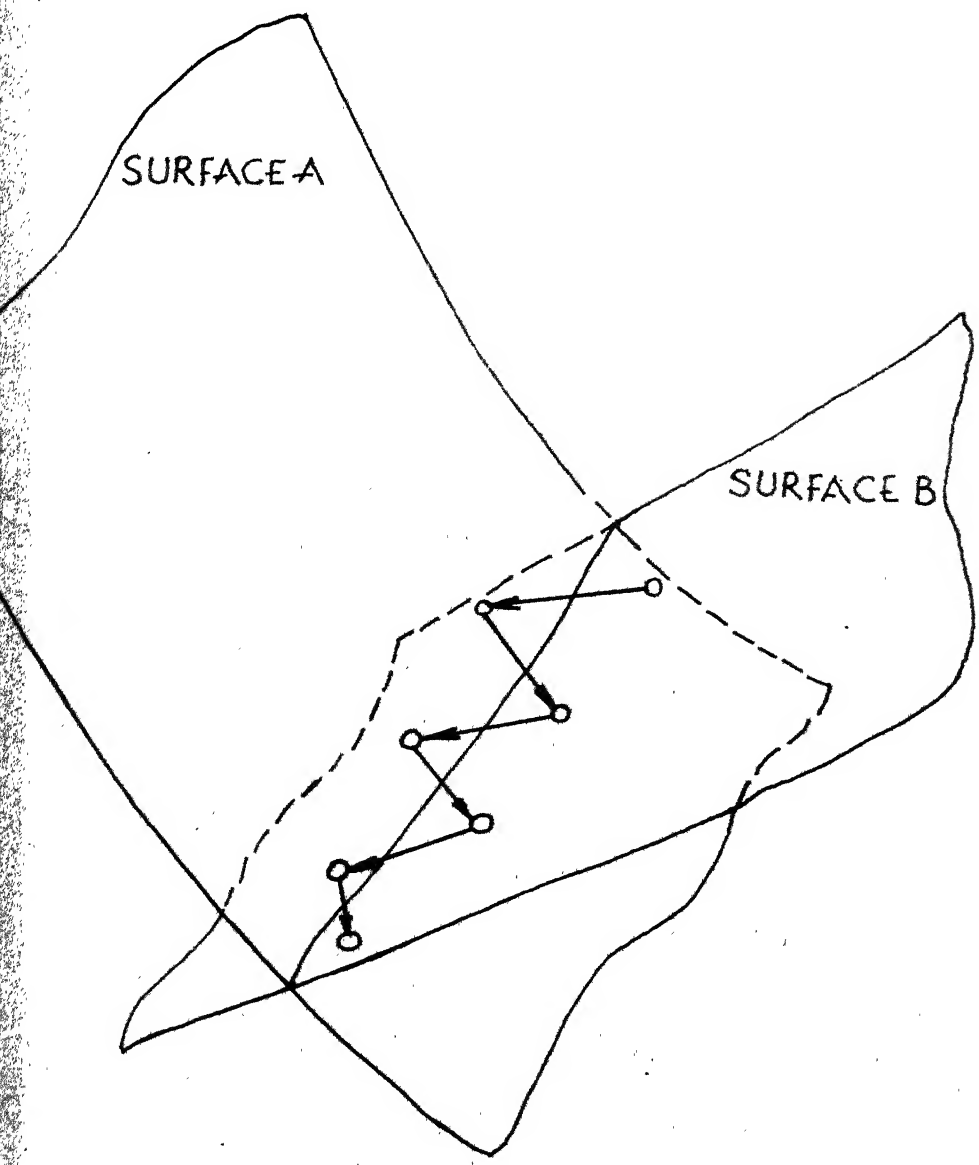

ZIGZAGGING

FIG 4·1

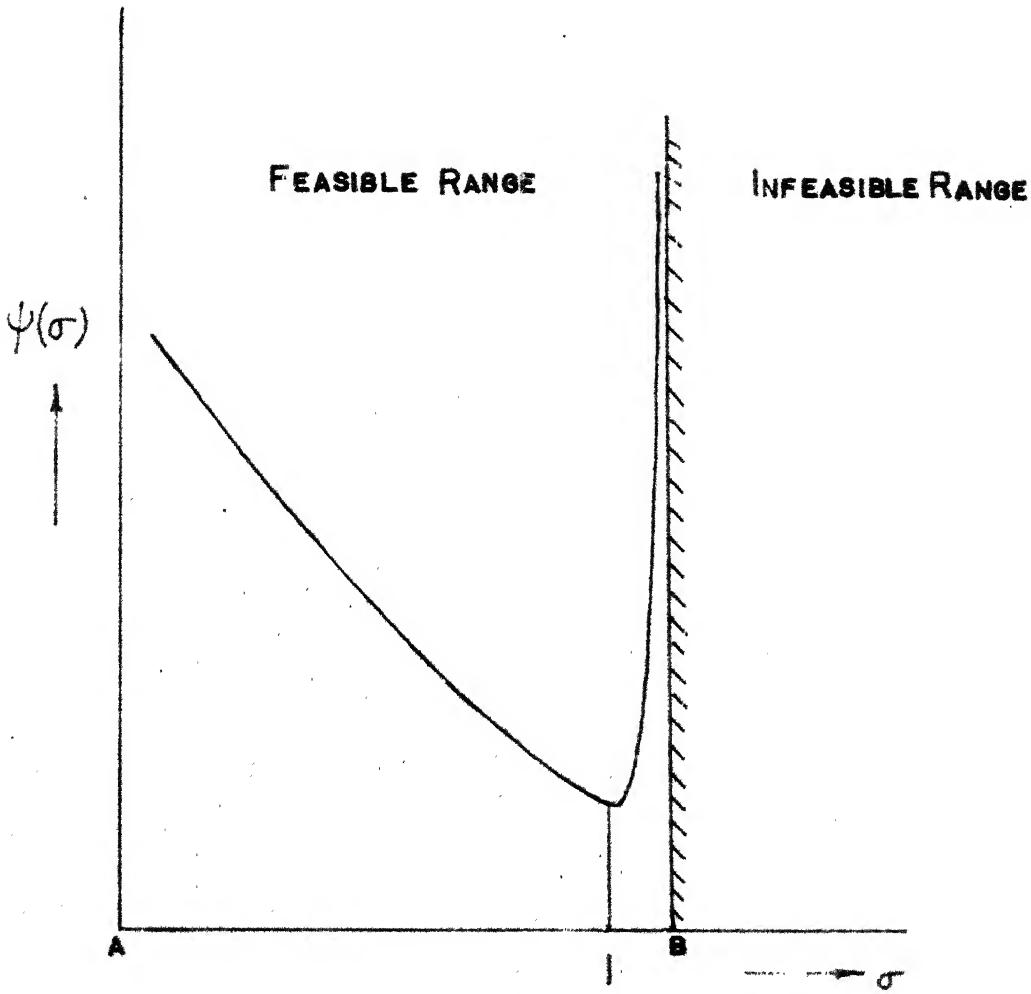

EXAMPLE OF ONE DIMENSIONAL MINIMIZATION

FIG. 4.2

CHAPTER V

RESULTS AND DISCUSSIONS

Nine illustrative examples have been considered to show the applicability of the constrained minimisation algorithm to solve gear box problems. First example is a main drive of an actual lathe. Results obtained therefrom are tabulated. Other examples have been studied to select the best layout diagram for an 18 - speed gear box. The criterion for "best" design in all the discussed examples is the minimum centre distance. Constants which are common to all examples are tabulated in Table 6.1.

5.1 Example - 1:

This is the main drive of a 10-speed gear box as shown in Fig. 1.3. It has 5 groups and also back gear arrangements with composite gears. 1st, 3rd and 5th group can have one independent driver gear therefore first six design variables denote number of teeth and their modules alternately. 7th, 8th and 9th variables indicate independent transmission ratios and account for the fixation of speed diagram. Input information for this problem is given in Table 6.2. Table 6.3 compares the existing and optimum values of gear teeth, their modules, minimum transmission ratio from each group and individual centre distance of each group.

the centre distances are shown in Table 5.6. Initial and final values of lowest transmission ratios are also indicated. The usual time for one complete run of each example is between 12 to 14 minutes. Since the component designs in these cases will not provide any useful information their computations have been avoided to save computer time. The examples have the same input information as example 2 except for the quantities indicated in Table 5.7. Initial and final speed diagrams for all the problems are indicated in Figures 5.5, 5.6, 5.7, 5.8 and 5.9 respectively.

5.4 Example - 8:

This is the same gear box as in example 7 but with different starting design vector. The initial and final design variables are indicated in table 5.7.

5.5 Example - 9:

Same example 7 is solved for 100 rated horse power capacity. The results obtained necessarily have greater centre distance as compared to example 7 but the final speed diagram does not change considerably from the optimised results of speed diagram of example 7. Optimum point has 7 bounded constraints.

5.6 Discussions :

The results from 1st problem show about 16% reduction over centre distance from the existing design. The rounded number of teeth have adjusted themselves in such a fashion that out of two mating gears the number of their teeth have no simple common factor which is desirable from the wear considerations. This added advantage shall be obtained almost always because the transmission ratios from different groups do not arrange themselves in simple fractions. The final speeds are within the tolerance of the preferred speeds. Centre distance in the first group in example 1 remains almost the same because the speed of 1st shaft does not change. The effect of change in speed diagram is observed in the later groups. Study of initial and final speed diagrams of different examples clearly show that the intermediate shaft try to attain as large speed as possible. This may be the cause that example 7 and 8 reach the same speed diagram. Results from example 9 indicate that there exists only one speed diagram for a particular layout which shall always be reached for any horse power capacity and same input and output speeds. Results from example 3, 4, 5, 6 and 7 indicate that the layout diagram used in example 5 for 18 - speed gear box is desirable from considerations of minimum centre distance.

The percentage improvement on the objective function in the first example may be attributed to one or more of the following points.

1. The gear box was designed to suite the requirements of already existing castings.

2. The method of gear design may be different from the one used here.

3. The design was not optimum even for the chosen speed diagram.

4. No attempt was made to exploit the independent design parameter i.e. transmission ratio to aid in the reduced size design.

The optimum search is possible here because the algorithm seeks the minima (at least relative) in the feasible design space.

The author does not claim that a global optimum has been reached for example 1. This is because firstly not many starting vectors were chosen due to shortage of computer time and secondly even for one starting point the iterations were stopped when no significant changes occured in objective function. Actually this was the trade off between computer time and accuracy desired.

TABLE - 6.1

VALUES OF CONSTANTS COMMON TO ALL EXAMPLES

Identifier	Magnitude
SIG W	20 Kg/mm^2
SIG C	12 Kg/mm^2
SIG T	8 Kg/mm^2
FSC	0.8
FNUT	1.2
FS	1.25
E	2100.0 Kg/mm^2
SC	1.125
ALH	10.000 hrs.
HOUR	4.00
ANG ( )	180°
GDCH	1.3
GDP	1.7
RHO	0.000008 Kg/mm^3
PLF	175 Kg.
CUTF	200 Kg.
DSP	32.0 mm.
DSJ	35.00 mm.
AAMOD ( )	1.0,1.125,1.375,1.5,1.75,2.0,2.25, 2.5,2.75,3.0,3.25,3.5,3.75,4.0, 4.5,5.0,5.5,6.0,6.5,7.0,7.5,8.0, 9.0,10.0.
EPS1	0.005
EPS2	0.001
EPS3	0.100
EPS4	0.005
ITIR	100

TABLE 6.2

VALUES OF THE CONSTANTS USED IN EXAMPLE I

Identifier	Values
HP	12.0
NSH	6
NGMAX	5
IBGSH	4
ILAP	4
IP ( )	$(3, 2, 1, 1, 1)^T$
ICAR ( )	$(1, 3, 1, 1, 1)^T$
ICOMP ( )	$\begin{bmatrix} 0 & 0 & 0 & 0 & 0 \\ 0 & 2 & 0 & 2 & 0 \\ 0 & 0 & 0 & 0 & 0 \\ 0 & 0 & 0 & 0 & 0 \\ 0 & 0 & 0 & 0 & 0 \\ 0 & 0 & 0 & 0 & 0 \end{bmatrix}$
DIS (,)	$\begin{bmatrix} 325 & 160 & 135 & 1 & 1 \\ 230 & 140 & 307 & 140 & 120 \\ 280 & 27 & 140 & 1 & 1 \\ 130 & -33 & 1 & 1 & 1 \\ 150 & 75 & 1 & 1 & 1 \\ 450 & 1 & 1 & 1 & 1 \end{bmatrix}$

TABLE 6.3

THE TABLE COMPARES THE OPTIMUM DESIGN TO THE EXISTING ONE

	S.No.	Existing Design	Optimum Design
1. Number of teeth/module			
	1,1	25/3.0	31.11/2.73
	1,2	30/3.0	36.92/2.73
	1,3	35/3.0	42.55/2.73
	2,1	15/3.0	18.33/2.73
	2,2	30/3.0	30.70/2.73
	2,3	35/3.0	36.51/2.73
	2,4	30/3.0	30.71/2.73
	2,5	25/3.0	25.07/2.73
	3,1	25/3.0	35.31/2.21
	3,2	53/3.0	30.58/2.73
	3,3	38/3.0	18.21/2.73
	4,1	25/3.0	25.67/2.21
	4,2	50/3.0	55.35/2.21
	5,1	47/3.5	32.34/2.25
	5,2	50/3.0	64.99/2.21
	6,1	47/3.5	84.75/2.25
2. Lowest transmission ratio from a group	1	0.717	0.852
	2	0.283	0.599
	3	0.500	0.638
	4	0.500	0.395
	5	1.000	0.386
3. Centre distance of groups	1	90.0	92.3
	2	99.0	66.5
	3	112.5	96.0
	4	112.5	96.0
	5	164.0	131.5
4. Total centre distance		578.5	482.3

TABLE 6.4

ROUNDED OFF GEARS AND MODULES AND DESIGN OF COMPONENTS

A

Gear Teeth	Modules	Corrections	Crushing Area	Z_m*	Limits Nominal Value	Lower	Upper
31	2.75	0.00	15.6	4	25.05	24.99	25.01
37	2.75	0.00	15.0	5	37.80	37.74	37.75
43	2.75	-0.23	15.0	5	37.60	37.54	37.56
18	2.75	+0.33	16.6	3	21.55	21.49	21.51
31	2.75	0.00	16.6	4	25.05	24.99	25.01
37	2.75	0.00	15.0	5	37.80	37.74	37.76
31	2.75	0.00	16.6	4	25.05	24.99	25.01
26	2.75	-0.15	15.0	3	20.95	20.89	20.91
36	2.25	0.00	24.0	5	30.09	30.03	30.06
31	2.75	+0.18	16.0	4	29.80	29.74	29.76
19	2.75	0.00	16.0	3	20.95	20.89	20.91
26	2.25	0.00	29.0	3	17.32	17.26	17.28
55	2.25	0.00	29.0	7	44.80	44.74	44.76
33	2.25	0.00	54.0	4	24.20	24.14	24.15
65	2.25	0.00	54.0	8	51.60	51.54	51.56
83	2.25	0.00	57.0	9	59.00	58.94	58.95

: Number of teeth over which measurement is to be taken.

B

Group No.	Centre distance	Lowest Transmission ratio
1	93.50	0.837
2	68.75	0.580
3	102.50	0.655
4	102.50	0.400
5	130.50	0.398

TABLE 6.4

ROUNDED OFF GEARS AND MODULES AND DESIGN OF COMPONENTS

A

Gear Teeth	Modules	Corrections	Crushing Area	Z_m*	Limits Nominal Value	Lower	Upper
31	2.75	0.00	15.6	4	25.05	24.99	25.01
37	2.75	0.00	15.0	5	37.80	37.74	37.75
43	2.75	-0.23	15.0	5	37.60	37.54	37.56
18	2.75	+0.33	16.6	3	21.55	21.49	21.51
31	2.75	0.00	16.6	4	25.05	24.99	25.01
37	2.75	0.00	15.0	5	37.80	37.74	37.76
31	2.75	0.00	16.6	4	25.05	24.99	25.01
26	2.75	-0.15	15.0	3	20.95	20.89	20.91
36	2.25	0.00	24.0	5	30.09	30.03	30.06
31	2.75	+0.18	16.0	4	29.80	29.74	29.76
19	2.75	0.00	16.0	3	20.95	20.89	20.91
26	2.25	0.00	29.0	3	17.32	17.26	17.28
55	2.25	0.00	29.0	7	44.80	44.74	44.76
33	2.25	0.00	54.0	4	24.20	24.14	24.15
65	2.25	0.00	54.0	8	51.60	51.54	51.56
83	2.25	0.00	57.0	9	59.00	58.94	58.95

: Number of teeth over which measurement is to be taken.

B

Group No.	Centre distance	Lowest Transmission ratio
1	93.50	0.837
2	68.75	0.580
3	102.50	0.655
4	102.50	0.400
5	130.50	0.398

TABLE 6.4 (CONTINUED)

C

S.No.	SHAFT		BEARINGS				CLUTCHES	
	Diameter	Deflection	Static Capacity		Dynamic Capacity		Type	Thermal Utilisation
			Left	Right	Left	Right		
1	32	0.039	504	455	2185	1207	EK-10d	45.76
2	32	0.025	863	480	2040	1200	EK-10d	59.82
3	35	0.017	785	783	2224	1979	EK-10d	93.31
4	36	0.031	708	1424	2283	3593	EK-20db	28.61
5	38	0.007	917	1500	2170	4500	EK-20d	98.83
6	50	0.032	165	2000	504	6100		

D

S.No.	Preferred Speed	Actual Speed	% Error
1	45	46.0	+2.20
2	64	65.7	+2.63
3	90	92.0	+2.21
4	127	130.0	+2.30
5	180	177.0	-1.70
6	255	253.0	-0.80
7	355	350.0	-1.40
8	500	497.0	-0.60
9	710	710.0	0.00
10	1000	983.0	-1.70

TABLE 6.5

INPUT DATA FOR EXAMPLE 2

Identifier	Value
RPMI	1400.0
RPML	35.5
RPMH	1600.0
HP	12.0
NSH	5
NGMAX	6
IBGSH	0
ILAP	0
IP ( )	$(3, 3, 1, 2)^T$
ICAR ( )	$(1, 3, 1, 9)^T$
ICOMP (,)	$\begin{bmatrix} 0 & 0 & 0 & 0 & 0 & 0 \\ 0 & 0 & 0 & 0 & 0 & 0 \\ 0 & 0 & 0 & 0 & 0 & 0 \\ 0 & 2 & 2 & 0 & 0 & 0 \\ 0 & 0 & 0 & 0 & 0 & 0 \end{bmatrix}$

TABLE 6.6

COMPARISON OF EXAMPLE NO. 3, 4, 5, 6 & 7

	S.No.	Ex. 3	Ex.4	Ex. 5	Ex. 6	Ex. 7
1.ICAR ( )	1	6	2	1	1	6
	2	2	6	3	6	1
	3	1	1	1	1	1
	4	1	1	9	3	3
2. Initial U (,1)	1	0.30	0.80	0.80	0.30	0.30
	2	0.80	0.30	0.50	0.30	0.80
	3	1.00	0.50	0.50	1.00	1.00
	4	0.45	0.89	0.81	1.17	0.35
3. Final U (,1)	1	0.37	0.76	0.89	0.90	0.36
	2	0.68	0.36	0.71	0.36	0.83
	3	1.10	1.05	0.55	0.97	0.97
	4	0.39	0.37	0.47	0.34	0.36
4. Centre Distance		362	314	303	320	351

TABLE 6.7

COMPARISON OF EXAMPLES 3 AND 8

	EXAMPLE 3		EXAMPLE 8	
	Initial	Final	Initial	Final
Design Variable (Normalised)	0.161	0.069	0.563	0.080
	0.889	0.122	0.421	0.420
	0.161	0.122	0.333	0.127
	0.889	0.204	0.421	0.399
	0.161	0.098	0.213	0.110
	0.889	0.220	0.617	0.230
	0.028	0.064	0.309	0.081
	0.314	0.334	0.444	0.339
	0.420	0.413	0.342	0.409

INPUT SPEED DIAGRAM FOR EXAMPLE NO: 1

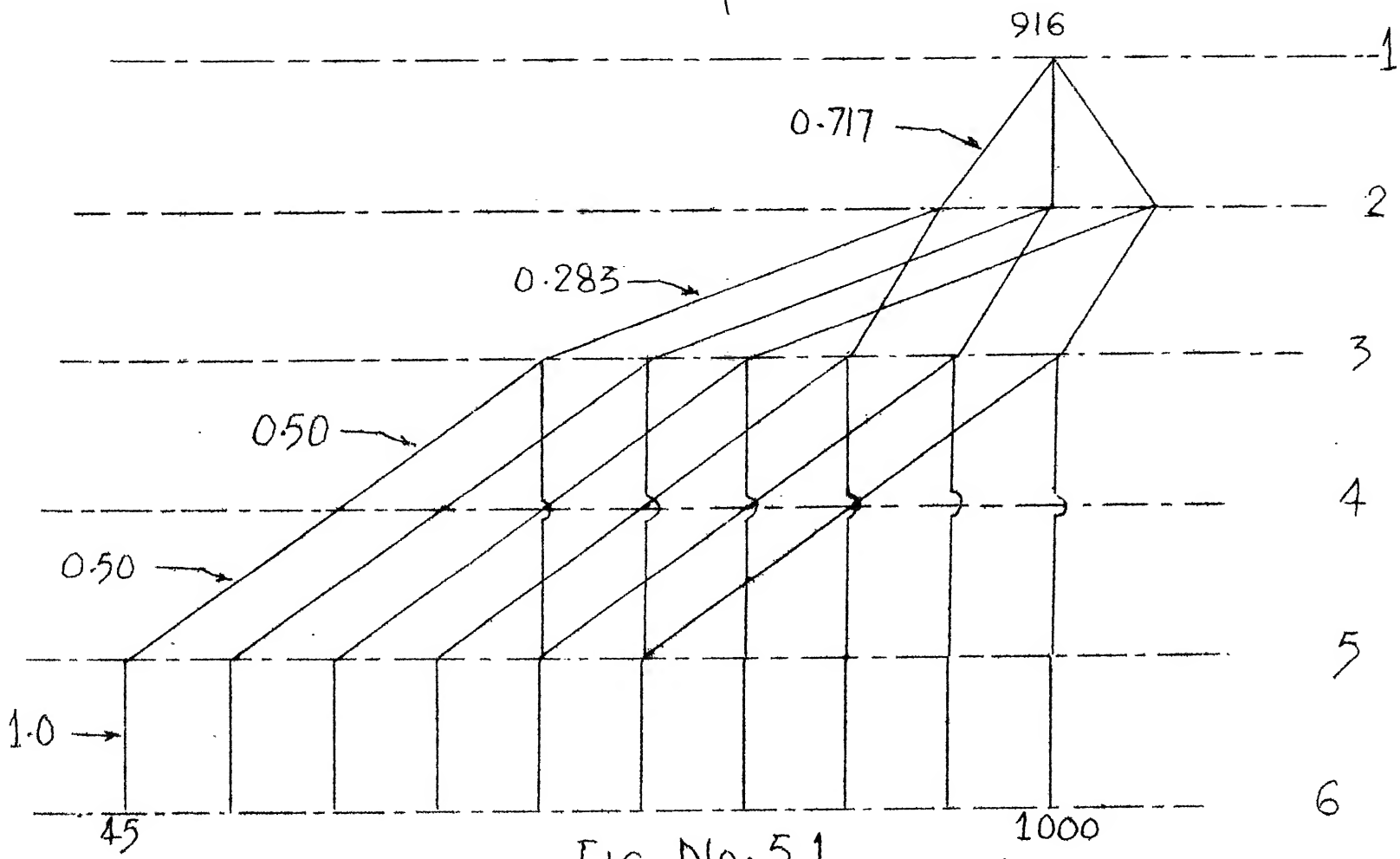

FIG. NO: 5.1

OPTIMAL SPEED DIAGRAM FOR EXAMPLE NO: 1

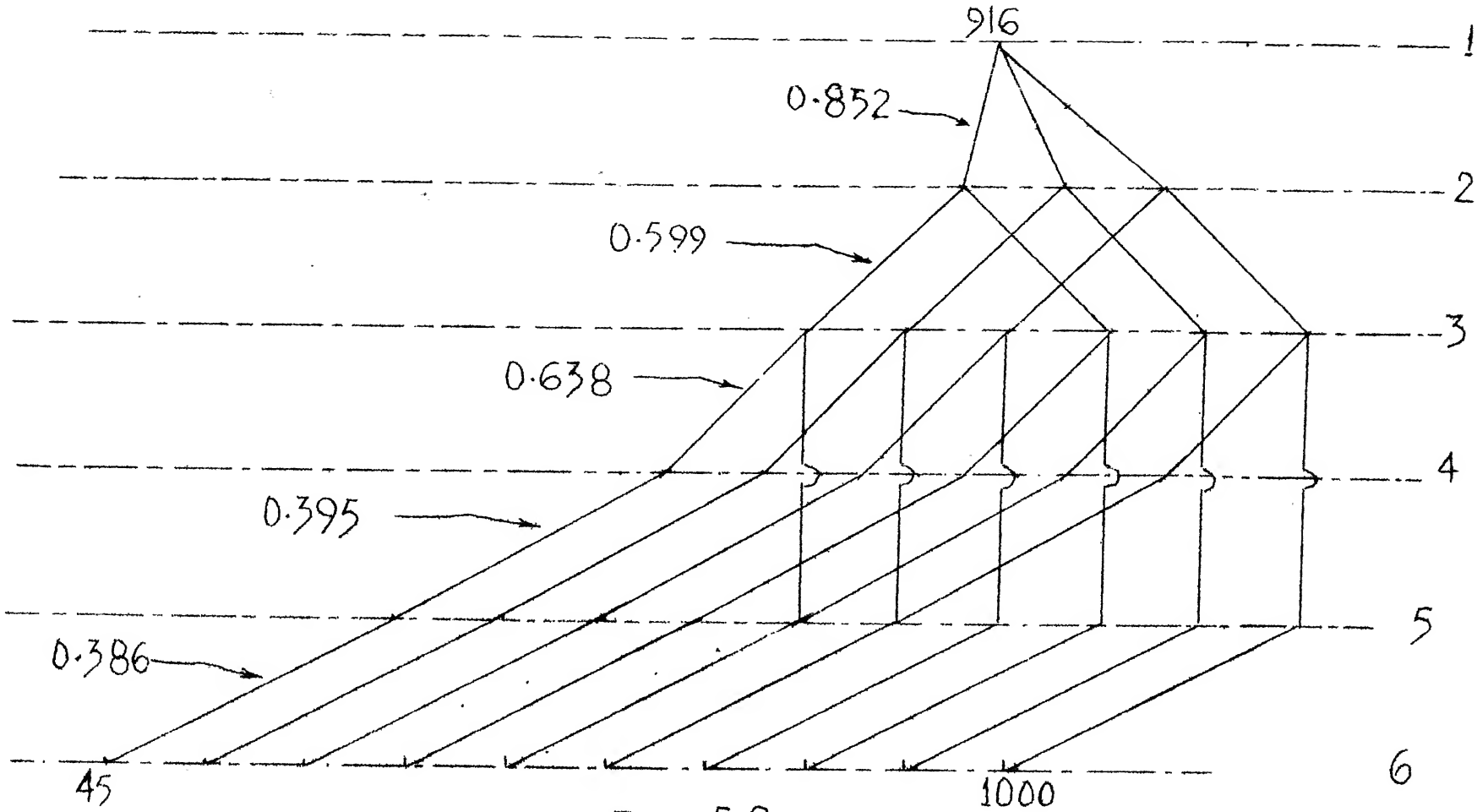

FIG. 5.2

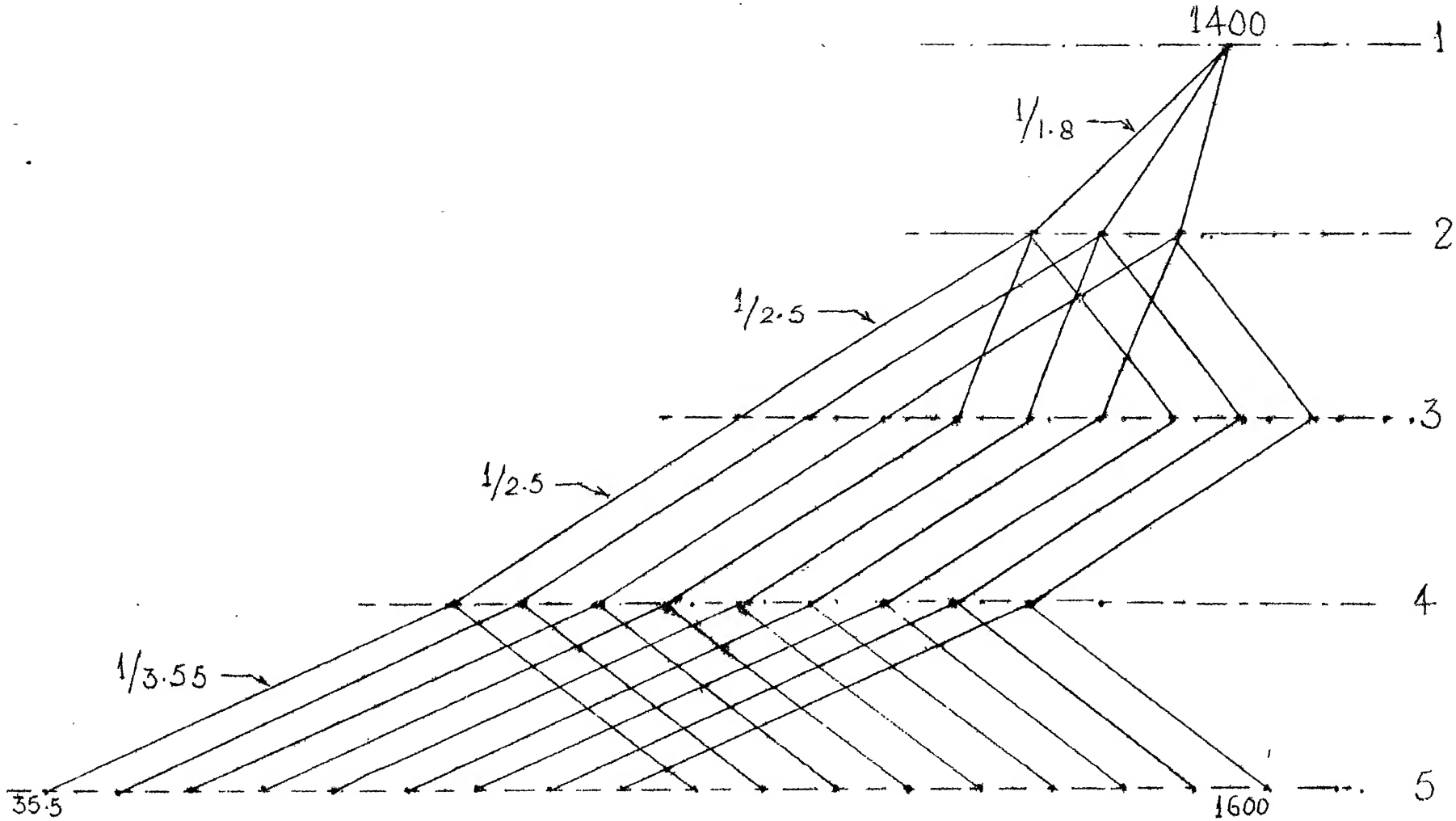

INPUT SPEED DIAGRAM FOR EXAMPLE No:2

FIG. 5.3

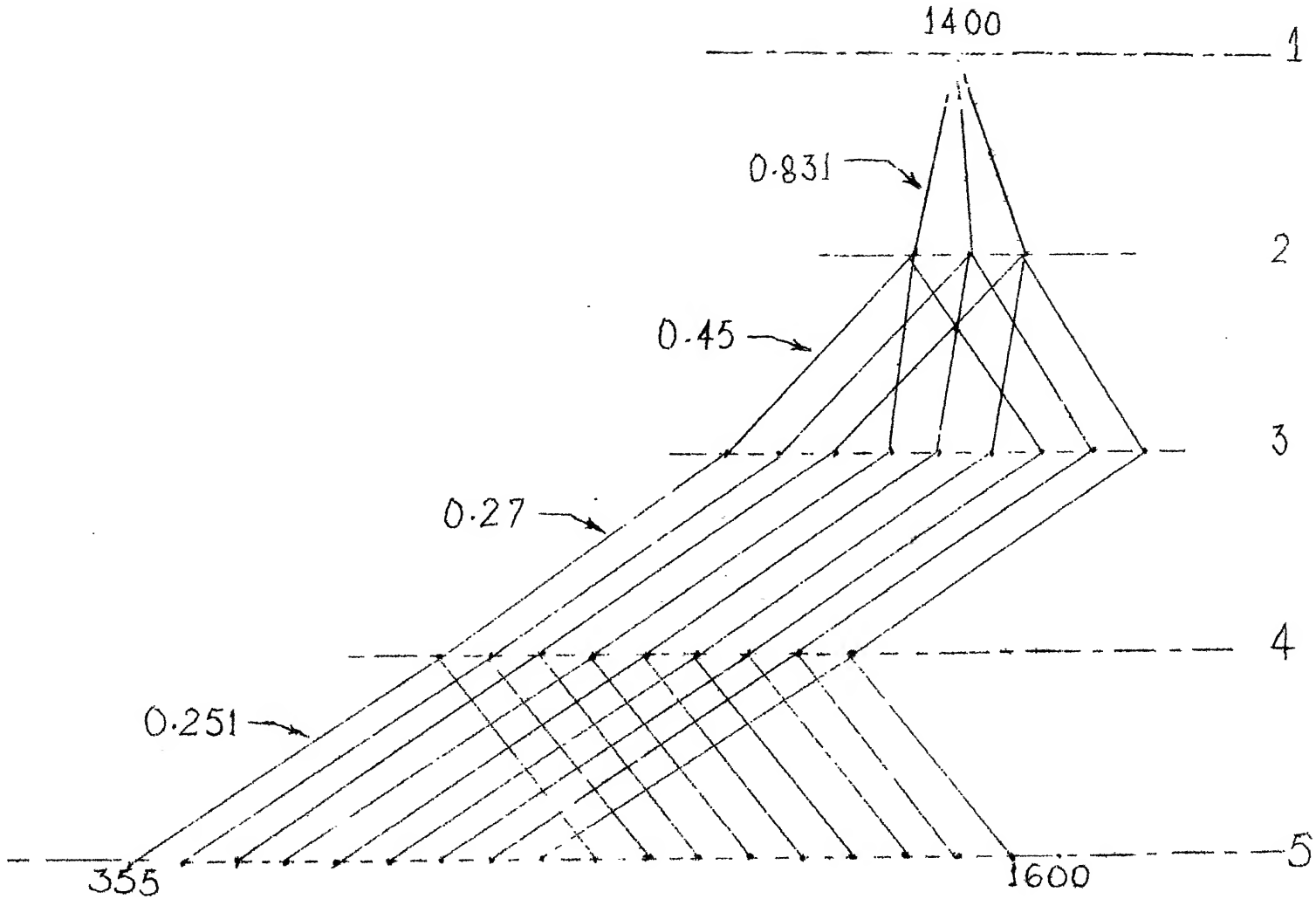

OPTIMAL SPEED DIAGRAM FOR EXAMPLE No:2

FIG. 5.4

INITIAL SPEED DIAGRAM FOR EXAMPLE No: 3

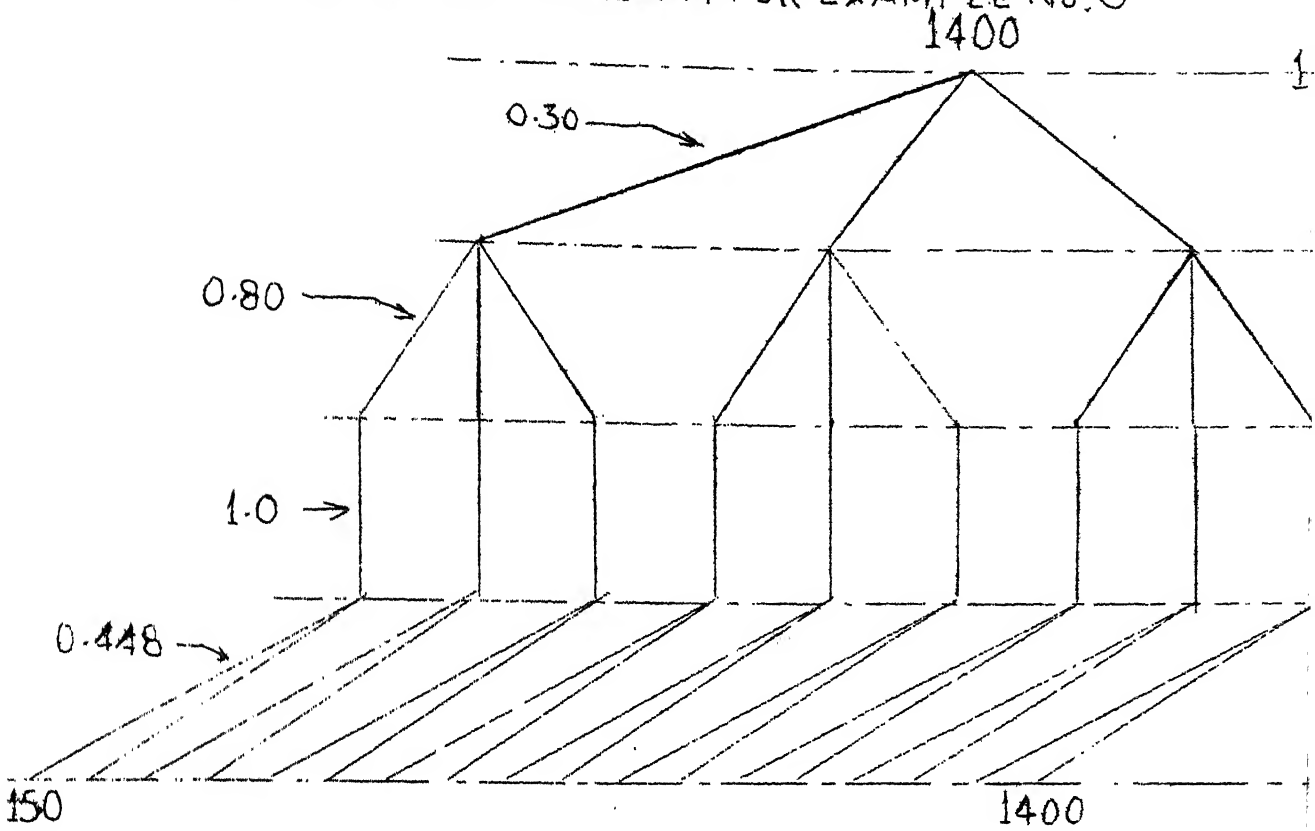

OPTIMAL SPEED DIAGRAM FOR EXAMPLE No: 3

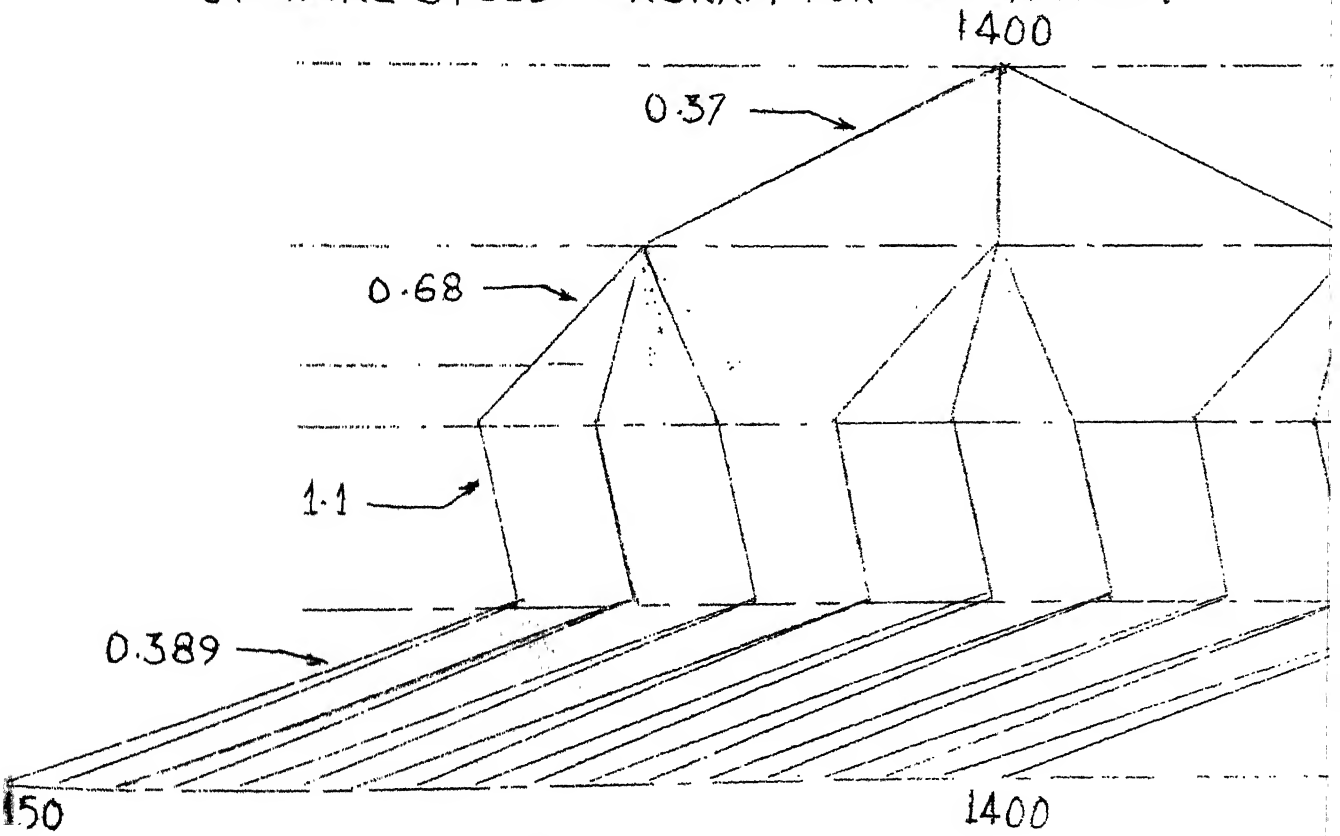

FIG. 5.5

INITIAL SPEED DIAGRAM FOR EXAMPLE No: 4

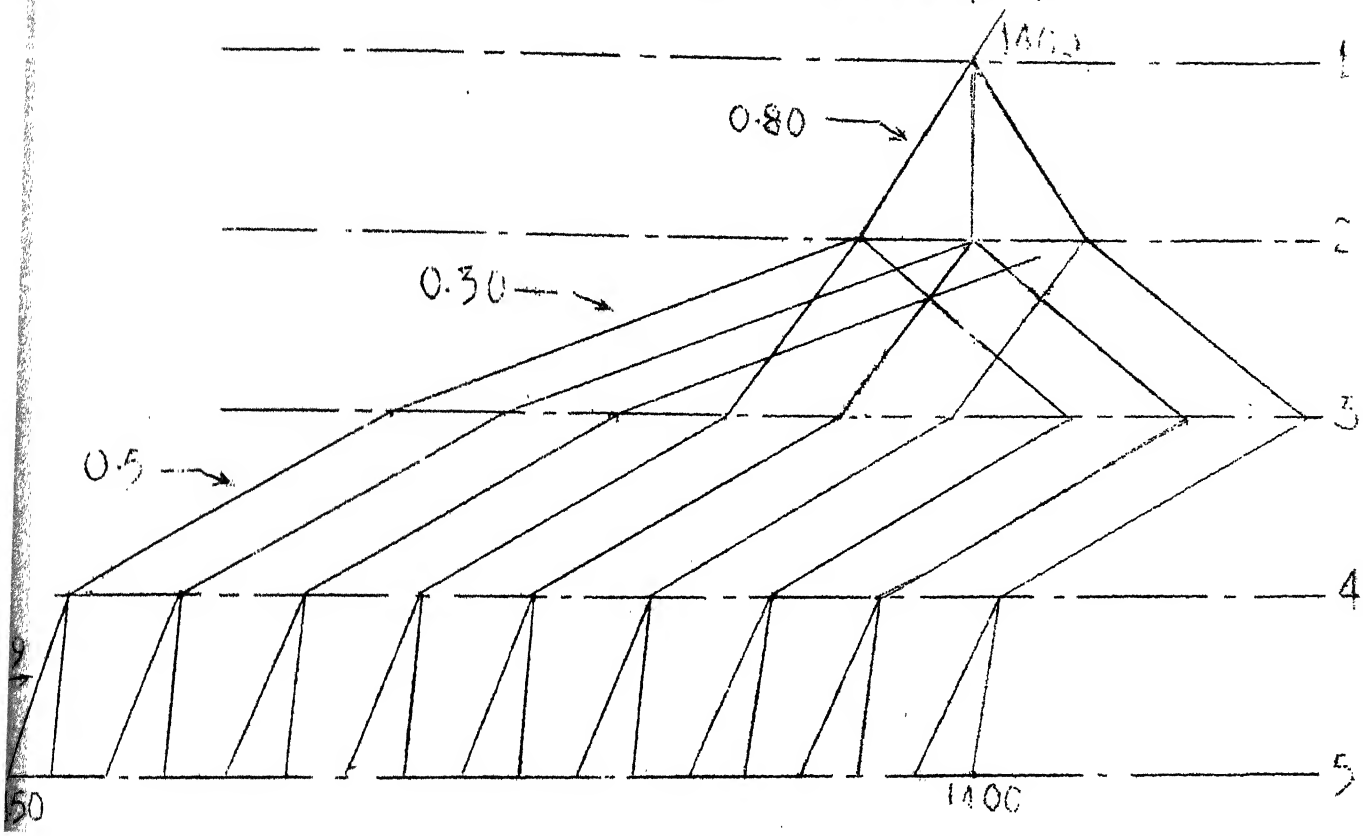

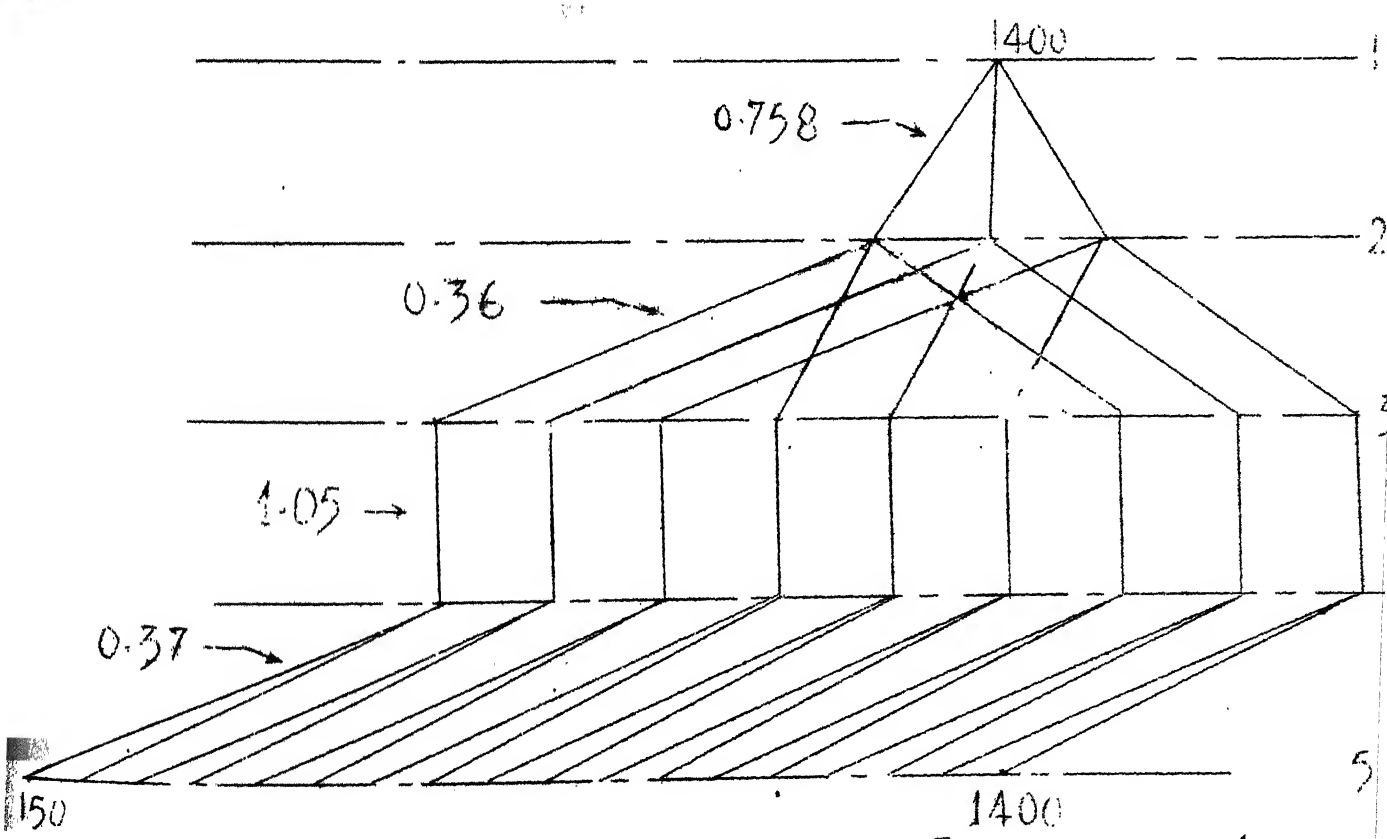

OPTIMIAL SPEED DIAGRAM FOR EXAMPLE NO: 4

FIG. 5.6

INITIAL SPEED DIAGRAM FOR EXAMPLE No:5

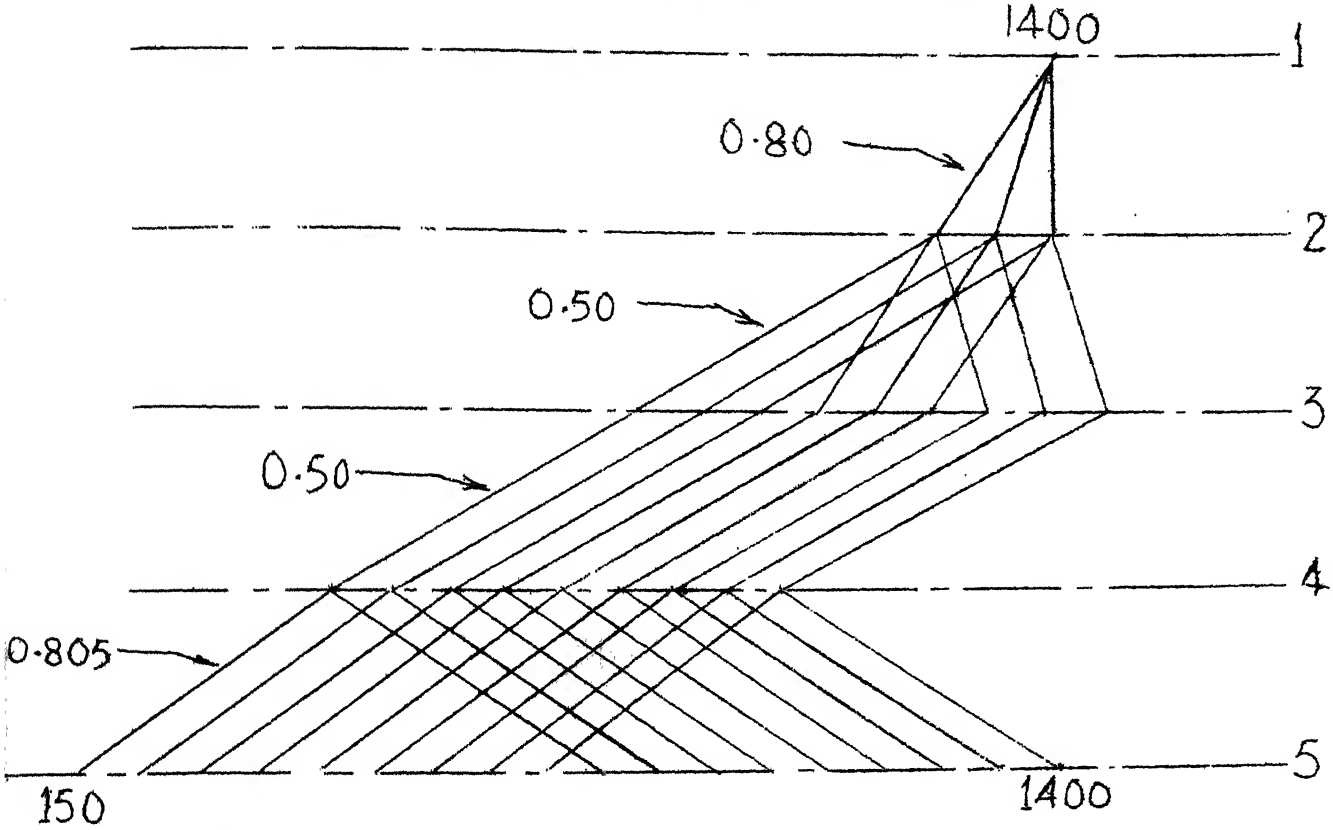

OPTIMAL SPEED DIAGRAM FOR EXAMPLE No:5

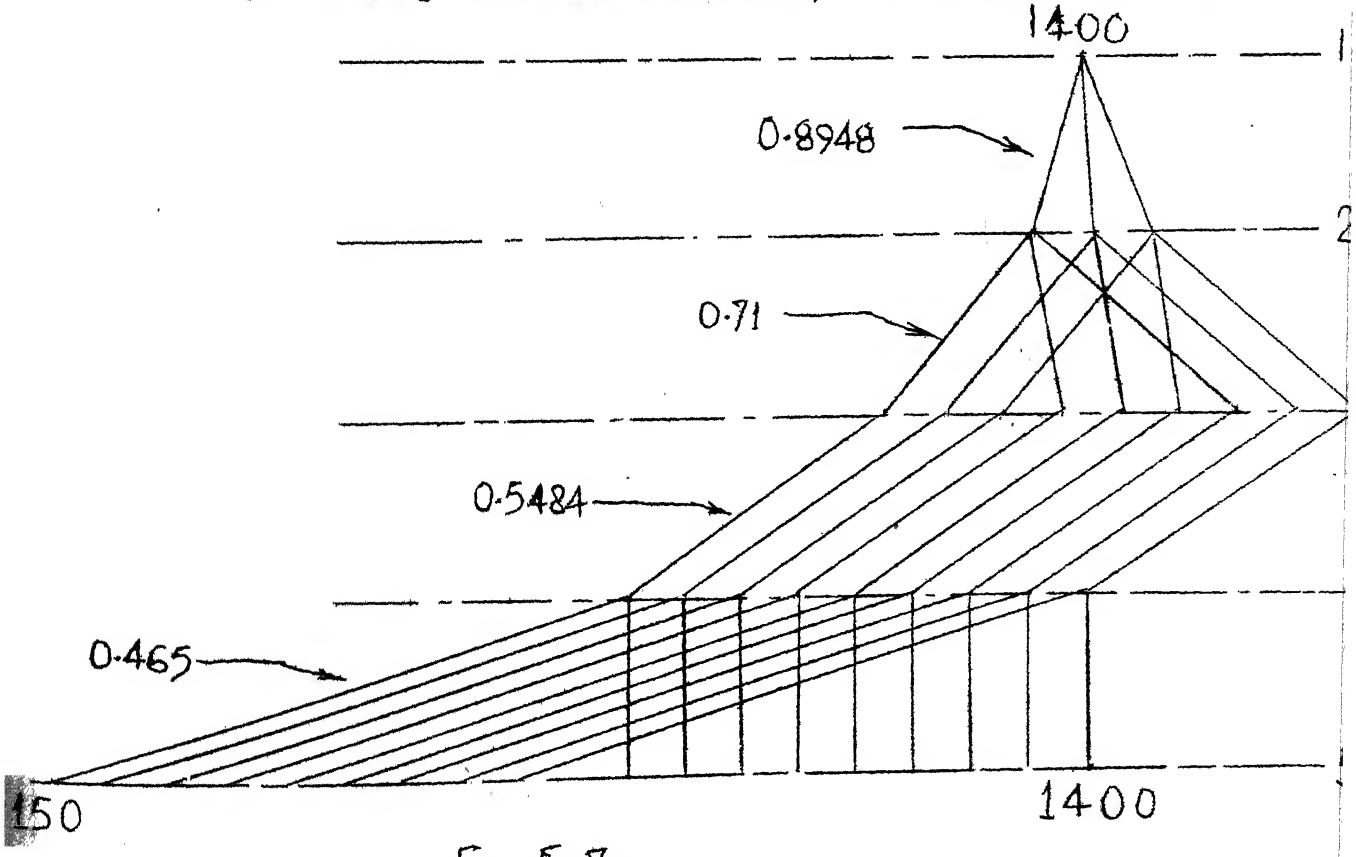

FIG.5.7

INITIAL SPEED DIAGRAM FOR EXAMPLE No: 6

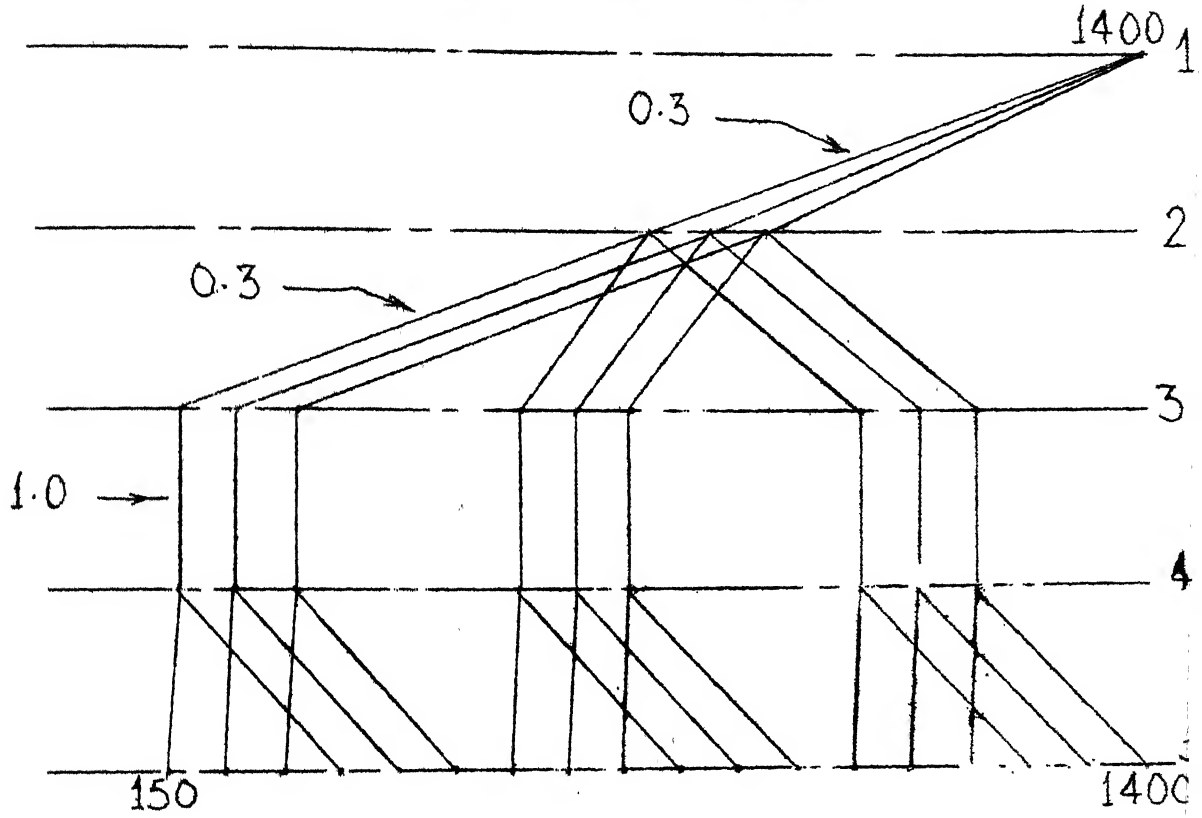

OPTIMAL SPEED DIAGRAM FOR EXAMPLE No: 6

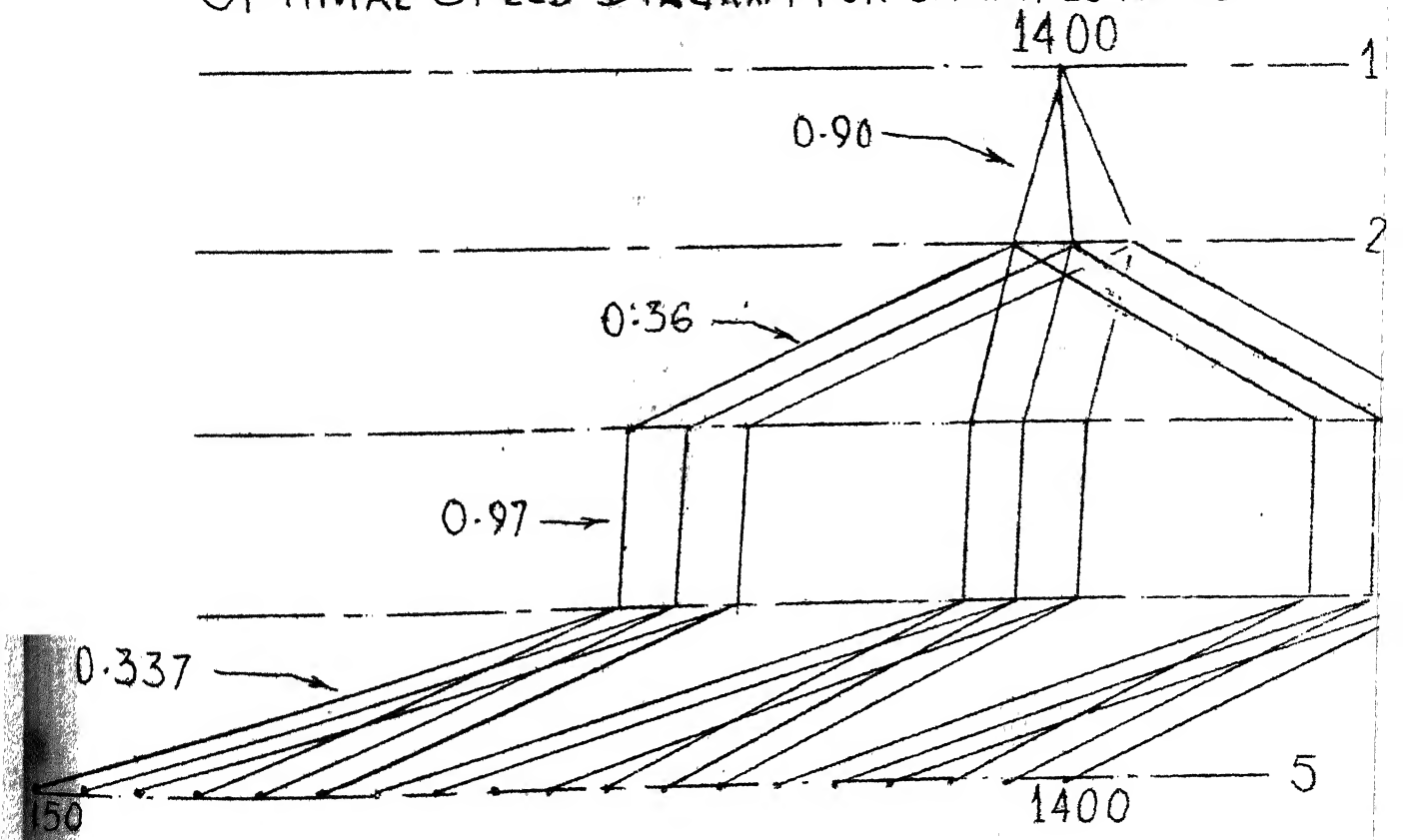

FIG. 5.8

INITIAL SPEED DIAGRAM FOR EXAMPLE No: 7

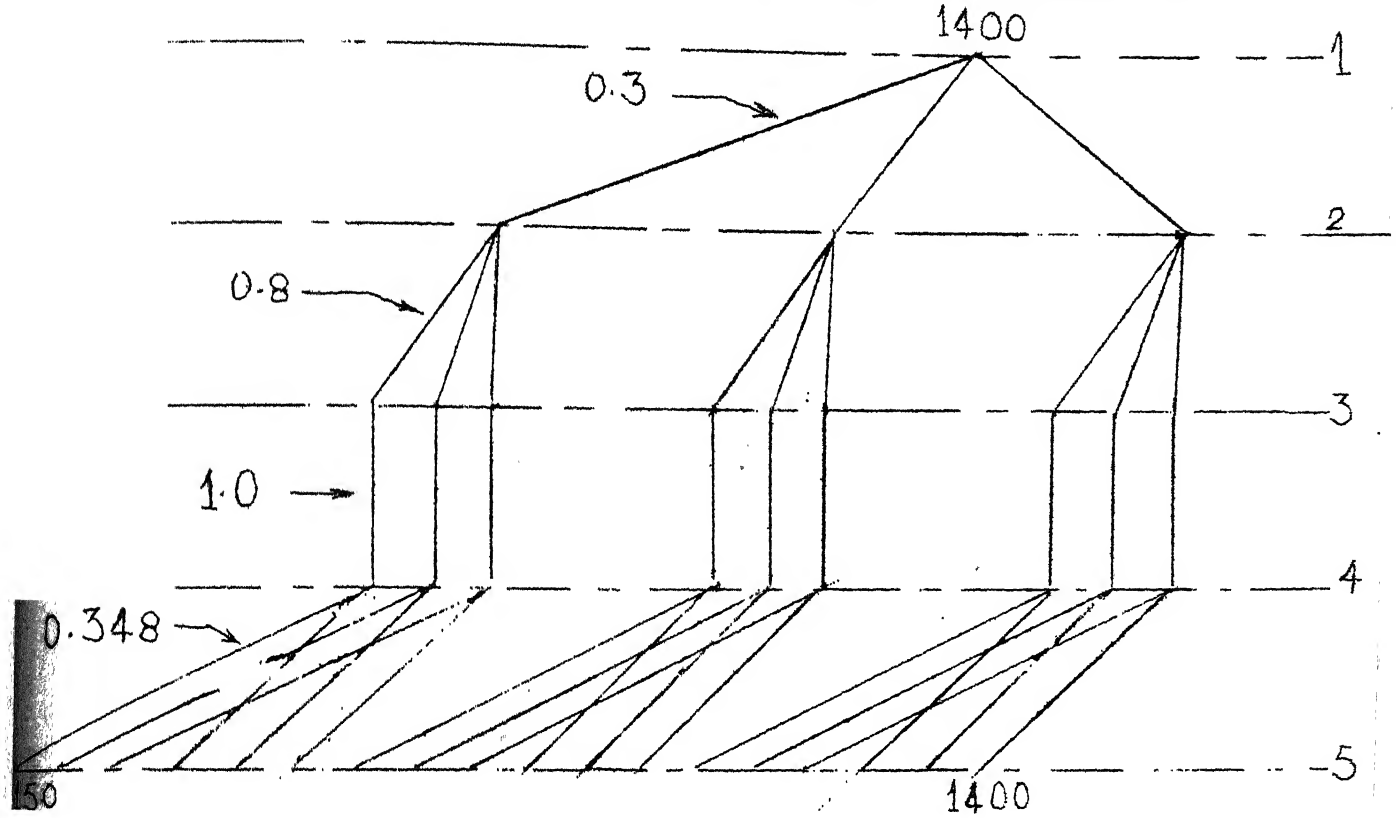

OPTIMAL SPEED DIAGRAM FOR EXAMPLE No: 7

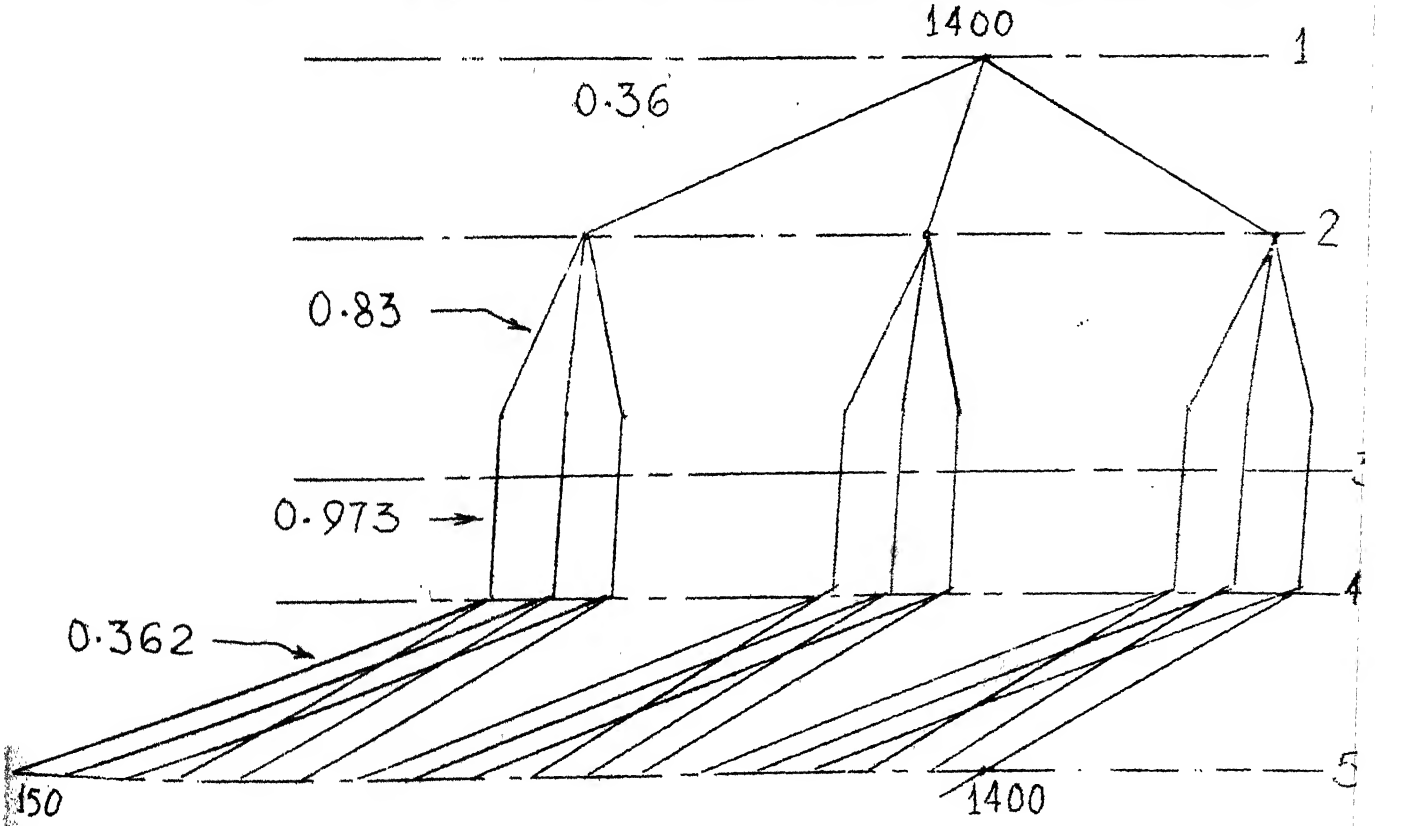

Fig 5.9

CHAPTER VI

CONCLUSIONS AND RECOMMENDATIONS

The application of the proposed method to solve a gear box problem shows that the complicated machine design problem can be tackled by computer. That the algorithm is of any practical use or not depends on the problem and the situation in which it is encountered. In general, the question as to whether a mathematical programming approach is suitable or otherwise for a practical design problem depends on the following considerations :

1. The need for obtaining an optimum design.

2. The effort and cost required to write a programme identifying the variables and constraints in the problem compared to man hour requirements in a conventional design office for the same problem.

3. The capability of the programme to tackle a wide range of similar problem.

The programme that has been developed is very general and can handle any speed gear box of conventional lay out diagrams. Therefore it spreads out the cost of developing the programme and the computer time required to achieve a satisfactory run. Moreover the design office requirements to completely design a gear box is tremendous.

The author does not claim to give sufficient information for final manufacturing of the gear box, but then, the results of the programme defenitely allow the designer to draw the final drawing and obtain other important dimensions from the assembly drawing itself. Thus the routine part of the analysis is not needed and using computer the designer obtains a optimum design as a bargain. Finally, it can be stated that the time and cost of development of the general programme, though considerable is quite insignificant to that for preliminary design of a single gear box. Many possible layout diagrams for the same speed can be studied before accepting one of them.

6.1 Recommendations :

The author recommends the following as a basis for further work in the field:

1. One very severe short coming of the algorithm is that it is not self starting. One has to feed starting feasible solution. However, remedying this is not as difficult as it sounds. The initial number of teeth and module can be given as very high values thereby making no room for inadequate power transmission. Only difficulty remains in establishing initial value of independent transmission ratios.

Generally putting the values between 0.5 to 1.0 in any order has resulted in a feasible design but it may not be true universally. Dependent transmission ratios have to be calculated to check the constraints on them. Had it been a self starting algorithm, this trouble would have been avoided.

2. The author strongly feels the necessity of main machine interaction at some of the places in the gear box design. One example is fixing of distances of the gears from the left hand bearing. This has been done here on the approximate judgement of the designer. However,, the human factor can be dispensed with if variables along the axis of the shaft are introduced. These will fix the Z coordinates of all the gears along the shaft with clearance as instructed.

3. The programme shall be more useful if the angular disposition of shaft is also introduced as a variable in space optimisation. But this will lead to other assembly restrictions. One of them is the location of the guide ways for movement of gear change levers. Exact assembly restrictions be incorporated

in consultation with Machine Tool manufacturing concerns.

4. In gradient calculations, the derivatives of constraints which do not vary with respect to certain design parameters have also to be computed for uniformity, though it is obvious that the derivatives would be zero. This accounts for much computer time. An algorithm may be developed in a minimisation programme which would identify those constraints which do not vary with respect to a variable about which the derivative is being calculated and skips the derivative computation.

REFERENCES

1. KOENIGSBERGER, F. 'Design Principles of Metal-Cutting Machine Tools'. The Macmillan Company, New York, 1969.

2. ACHERKAN, H.S. 'Metalorezushhyie Stanki', Mashinostroyeniye Publishers, Moscow (1965)

3. TARZIMANOV, G.A. 'Proyektirobhaniye Metalorezushhikh Stankov' Mashinostroyeniye Publishers, Moscow (1965)

4. HADLEY, G. 'Nonlinear Programming', Addison Wesley Pub. Con. Inc.

5. ZOUTENDIJH, G., 'Methods of Feasible Directions', (New York American Elesevier Publishing Co., Inc. 1960)

6. KAPOOR, M.P. 'Automated Optimum Design of Structure Under Dynamic Response Restrictions', Ph.D. thesis, Division of Solid Mechanics, Structures and Mechanical Design, Case Western Reserve University, Dec. 1968.

7. FOX, R.L. 'Mathematical Methods in Optimisation', one of the series of special lectures on 'An Introduction to Structural Optimisation', University of Waterloo, 1968

8. SRIRAM, S.S. 'Optimum Design of Balanced Cantilever Bridge Girders' M.Tech. thesis, Department of Civil Engineering, Indian Institute of Technology, Kanpur.

9. MORE, J. 'M.Sc. thesis, Division of Solid Mechanics, tructures and Mechanical Design, Case Western Reserve University'

10. WHITE, G. 'Four Speed Gear Box with six Gears', Int. Jl. of Machine Tool Design & Research, 1967, Vol. 3

11. CINDAR, F.A. 'A Mathematical programming approach to design of a transmission', M.Sc. thesis, Division of Solid Mechanics, Structures and Mechanical Design, Case Western Reserve University, July, 1970.

12. KREYSZIG, E. 'Advanced Engineering Mathematics', John Wiley and Sons, Inc., New York

13. FIACCO & McCORMIC 'Computational Algorithm for the S.U.M.T. for non linear programming'. Management Science Vol. V 10 n4, 1964, pp. 601-617

APPENDIX A

In this Appendix it is mathematically proved that the three composite gears as a shaft are not possible. The maximum and minimum output speed with two composite gears are found. This analysis is to stress the use of fewer pairs of gears for the same transmission.

A.1 Impossibility of Three Composite Gears on a Shaft:

To arrive at 18 spindle speeds the minimum numbers of gears is shown to be 11 in the Fig. (A.1). The problem which has been discussed earlier used 17 gears for the same purpose. But not all the rest are redundant or dispensible. It has been shown below for the arrangement in Fig. (A.1) that the combination will lead to active number of teeth for few of the gears if we fix one of the gear teeth say a. In fig. the different gear ratios are indicated. S is the minimum desired speed and the input speed is taken to be 1 for convenience. The other speeds on the shaft indicates the fractions of the input speed. The letters a, b, c etc. are used for actual number of teeth on those gears.

Layout diagram for the first two groups in the Fig. A.1 is shown in Fig. A.1a. Nine independent equations derived therefrom are indicated below:

$$S = \frac{a.c}{d.h} \qquad (A.1)$$

$$S^{x_1} = \frac{b}{h} \qquad (A.2)$$

$$S^{2x_1} = \frac{C.e}{f.h} \qquad (A.3)$$

$$S^{x_2} = \frac{a}{g} \qquad (A.4)$$

$$S^{2x_2} = \frac{af}{di} \qquad (A.5)$$

$$a + d = b + e \qquad (A.6)$$

$$a + d = e + f \qquad (A.7)$$

$$d + g = e + h \qquad (A.8)$$

$$d + g = f + i \qquad (A.9)$$

These constitute nine equations in nine gear teeth unknowns. Therefore, none of the gears can be arbitrarily chosen. By solving these equations, one gets a relation between a and d, which is not admissible for any combination of S and Ø.

A.2 Analysis With Two Composite Gears:

Instead of tackling the whole problem we shall see if even six spindle speeds are possible from the arrangement shown in Fig. A.2 which uses 8 gears. If it is, then it can be used as a subassembly for an 18 speed gear box. In that case the shaft number 1 in Fig. A.2 will have three different speeds by a cluster gear set from the motor shaft,

Equations (A-13) and (A-14) are redundant as they can be derived from other equations i.e. L.H.S. and R.H.S. match separately by the following relationship:

$$(A\text{-}14) = \frac{(A\text{-}13) \cdot (A\text{-}11)}{(A\text{-}10)} \text{ and } (A\text{-}15) = \frac{(A\text{-}12) \cdot (A\text{-}13)}{(A\text{-}10)}$$

Now we have seven independent equations in 8 unknowns therefore all gear teeth are solvable in terms of "a" and the minimum speed desired S for a particular layout. The solution is lengthy and is carried out in the following steps. Eliminating c and b from (A-12) and (A-13) respectively and substituting in other equations, then eliminating f, e, g, h alternately and substituting in the remaining equations we get following relationship between a and d.

$$d = \frac{a \cdot (\phi^{x_2} - \phi^{2x_1})}{(S\phi^{2x_1+x_2} - S\phi^{x_2} - \phi^{x_2} + 1) \cdot \phi^{x_1}} \qquad (A\text{-}19)$$

while the other teeth number are written below in terms of a and the known teeth number.

$$h = \frac{(a + d) \cdot a}{S \cdot \phi^{x_2} \cdot (a\phi^{x_1} + d)} \qquad (A\text{-}20)$$

$$g = \frac{(a + d) \cdot a}{S \cdot \phi^{x_2} \cdot (a + d\phi^{x_2})} \qquad (A\text{-}21)$$

$$e = S \cdot d \cdot g \cdot \phi^{x_1 + x_2}/a \qquad (A\text{-}22)$$

Equations (A-13) and (A-14) are redundant as they can be derived from other equations i.e. L.H.S. and R.H.S. match separately by the following relationship:

$$(A\text{-}14) = \frac{(A\text{-}13) \cdot (A\text{-}11)}{(A\text{-}10)} \text{ and } (A\text{-}15) = \frac{(A\text{-}12) \cdot (A\text{-}13)}{(A\text{-}10)}$$

Now we have seven independent equations in 8 unknowns therefore all gear teeth are solvable in terms of "a" and the minimum speed desired S for a particular layout. The solution is lengthy and is carried out in the following steps. Eliminating c and b from (A-12) and (A-13) respectively and substituting in other equations, then eliminating f, e, g, h alternately and substituting in the remaining equations we get following relationship between a and d.

$$d = \frac{a \cdot (\phi^{x_2} - \phi^{2x_1})}{(S\phi^{2x_1+x_2} - S\phi^{x_2} - \phi^{x_2} + 1) \cdot \phi^{x_1}} \qquad (A\text{-}19)$$

while the other teeth number are written below in terms of a and the known teeth number.

$$h = \frac{(a + d) \cdot a}{S \cdot \phi^{x_2} \cdot (a\phi^{x_1} + d)} \qquad (A\text{-}20)$$

$$g = \frac{(a + d) \cdot a}{S \cdot \phi^{x_2} \cdot (a + d\phi^{x_2})} \qquad (A\text{-}21)$$

$$e = S \cdot d \cdot g \cdot \phi^{x_1 + x_2}/a \qquad (A\text{-}22)$$

$$f = S \cdot d \cdot h \cdot \phi^{x_1}/a \qquad \text{(A-23)}$$

$$b = S \cdot g \cdot \phi^{x_2} \qquad \text{(A-24)}$$

$$c = S \cdot h \cdot \phi^{2x_1} \qquad \text{(A-25)}$$

It is evident that the arrangement is meaningful only with such S and ϕ values which make the R.H.S. of (A-19) positive.

Particular Cases:

(i) According to the arrangement shown in Fig. (A.2a) where $x_1 = 1$, $x_2 = 3$ we get from (A-19)

$$d = \frac{a\,\phi}{(S\phi^4 + S\phi^3 - \phi^2 - \phi - 1)} \qquad \text{(A-26)}$$

It follows that

$$S\phi^4 + S\phi^3 - \phi^2 - \phi - 1 > 0 \qquad \text{(A-27)}$$

for $\phi = 14$, and for inequality (A-27) to be true we must have

$$S > 0.647$$

to avoid excessive big gear in "d" the inequality should be sufficiently above zero. The minimum of the maximum spindle speeds attainable theoretically will be $0.647 \times 1.4^5 = 3.72$ times the input speed of shaft 1.

(ii) For the arrangement shown in Fig. (A.2b) where $x_1 = 2$, $x_2 = 1$ we get the inequality

$$(\phi^2 + 1) \cdot (S\phi^3 + S\phi^2 + 1) > 0 , \quad \begin{matrix} S > 0 \\ \phi > 0 \end{matrix} \tag{A.28}$$

which is satisfied for all values of S and ϕ. This is a very encouraging result. This shows that even if the recommended layout diagram is not followed the number of moving parts in the arrangement can be reduced by using this as a part drive for the gear box.

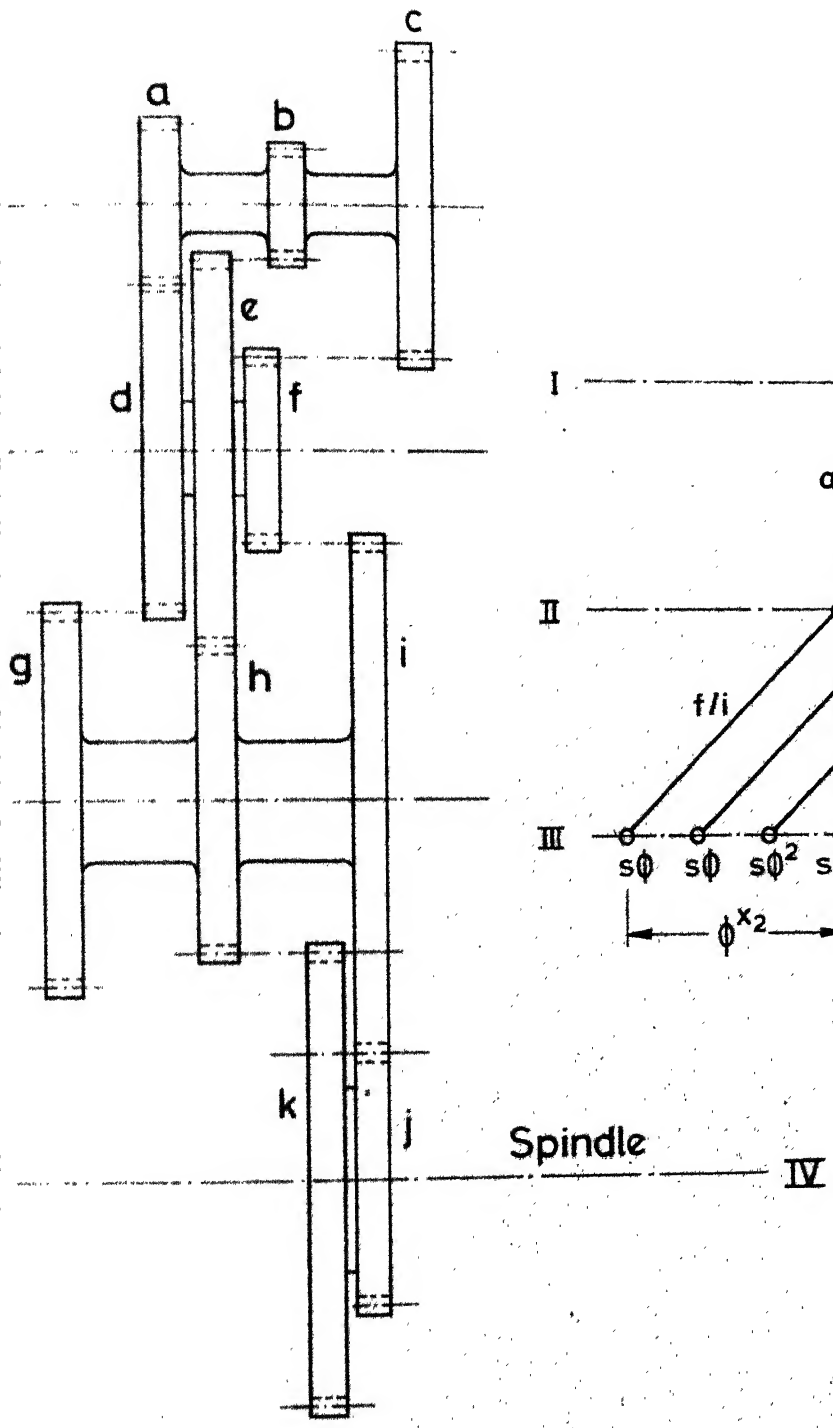

Fig. A-1

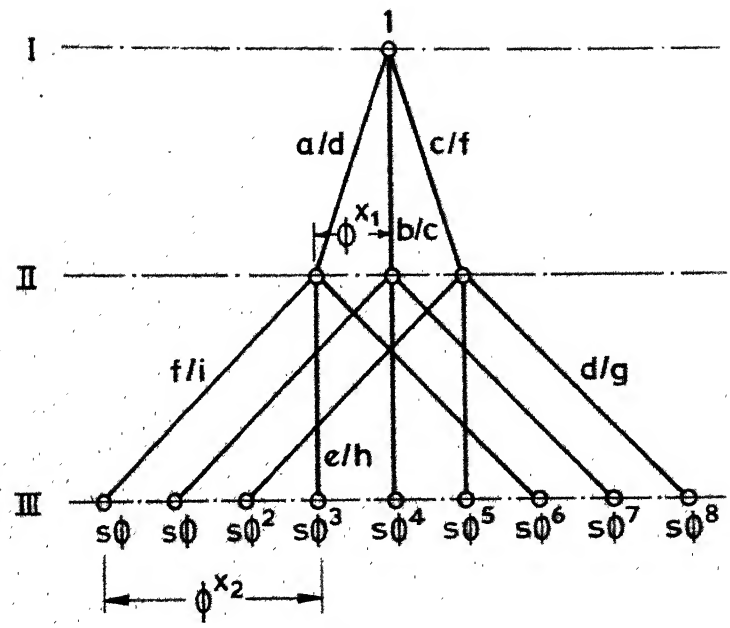

Fig. A-1-a

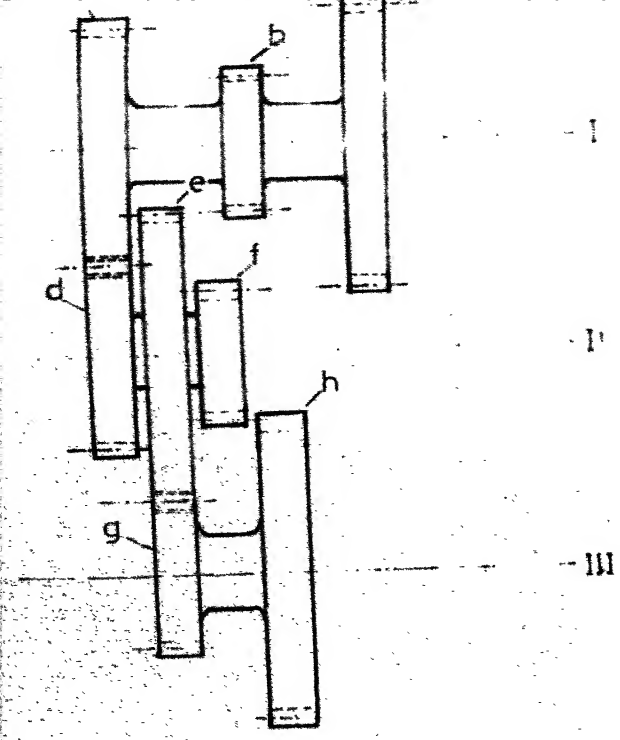

FIG A3

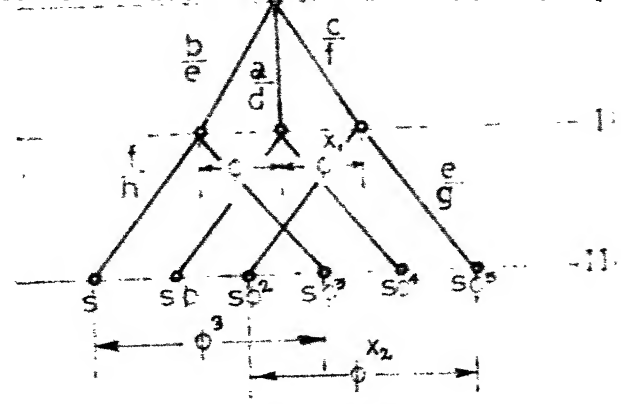

FIG-A3a

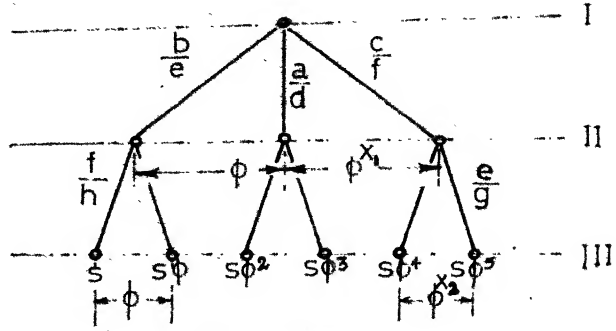

FIG A3b

APPENDIX B

DESIGN OF COMPONENTS

Manual design calculations for the components of the gear box is highly time consuming. Moreover, it becomes almost impossible to take into account all the conditions of loading and select the critical one. The situation becomes even more complex with the increase in the number of spindle speeds. The design of some of the components subject to the worst loading case is discussed in this Appendix.

B.1 Shaft Design :

From assembly considerations, the shafts are usually designed in the form of stepped cylindrical bars (Fig.B1).

In the design of shafts the following considerations are important:

1. The bearings supporting the shaft are considered as simple supports offering no moment.

2. The driving and the driven forces are generally non-parallel and non-coplaner. Only in case of composite gears the driving and driven forces are coplanar.

3. The number of loading conditions on a shaft is a product of the number of driver and driven gears on that shaft. In case of first shaft and the

spindle, it is equal to the number of driver and driven gears respectively.

4. Since the least speed produces maximum torque and load on the shaft, minimum speed for particular loading condition of the shaft is considered for bending moment calculations.

5. The resultant force on a gear acts along the pressure line.

6. Distances of gears on a shaft should be given in order to calculate the bending moment at different sections of the shaft.

7. The relative disposition of shaft should be given as input information. In the present work this is given in terms of included angle in clockwise direction. Fig. B2 shows the included angles.

8. A suitable coordinate system should be chosen to facilitate the calculation of the bending moment of shaft in two dimensions. A shaft can be loaded by only two forces at a time, namely the driver and the driven force. The co-ordinate system chosen here is an oblique system with X and Y axis coinciding with the direction of the two forces.

There may be three distinct types of loadings for a gear box shaft.

a. One (either pulley or cutting) load acts on the overhanging portion of the shaft while the other (gear) load acts in between the bearings.

b. Both the loads act on the gears and lie in between the bearings.

c. Both the loads act on the gears but one of them lies in the over-hanging portion.

The above three loading conditions have been taken into considerations in the Computer programme for bending moment and deflection calculations.

The shafts are designed first for adequate bending stress and then checked for deflection. The deflection at the gear point is not allowed to exceed a value of m/50.

B.2 Bearings:

The recommended working life of a bearing is about eight to ten thousand working hours. There may be several types of bearings available for this life and for the conditions of loading which develop maximum thrust on the bearings. Therefore, it is recommended here that factors like static and dynamic capacity of bearings be tabulated. This helps

the designers to select the best type from the available stock.

The relationship between the bearing life and the basic dynamic capacity is given as

$$L = (C/P)^p \qquad (B.1)$$

where

L - Nominal life in millions of revolutions,

C - Basic Dynamic Capacity

P - equivalent radial load in the bearing and

p - 3 or 10/3 for ball or roller bearings respectively.

The relation between life in millions of revolutions L and life in working hours L_h is expressed by

$$L = \frac{60 \cdot n \cdot L_h}{10^6} \qquad (B.2)$$

where n is the r.p.m.

For a life of 10,000 working hours

$$L = 0.6.n$$

and the dynamic capacity for the ball bearing is

$$C = P \cdot L^{1/p}$$

$$= P\,(0.6.n)^{0.333}$$

The equivalent load P is not the maximum load amongst all the conditions of loading of the shaft because the

gear box is not expected to run always at that speed of the spindle. P is function of the individual loads in each type of loading, corresponding shaft speeds and the percentage time for which they act. In absence of informations about the time-sharing of the spindle speeds, average of all the dynamic capacities obtained in different loading conditions is tabulated here in order to avoid overdesigned bearings.

B.3 Clutches :

Three types of clutches are generally used in the gear boxes. They are :

a. Mechanical or Jaw Clutches,

b. Hydraulic Clutch and

c. Electromagnetic Clutch.

The dimensions of the clutches, in majority of designs, are not in exact conformity with the requirements of the gear box but the clutches are only selected from the available stock. Therefore, unless the thermal utilisation factor of the selected clutches is more than 100%, the selection is approved. Care should be exercised to select a clutch not very much overdesigned, because it costs more and occupies more space. Only electromagnetic clutches are discussed in the present work.

Fig. B3 shows an electromagnetic clutch. Either the magnetic body or the armature is coupled to the gear of

the drive and rotates on the shaft freely. The remaining part is keyed to the shaft. The preliminary selection of the clutches are done on the basis of maximum torque to be transmitted from a gear.

B.3.1 Thermal Utilization of the Clutch :

This is the ratio of the maximum energy absorbed by the clutch to the equivalent capacity of the clutch or

$$Th.U. = E/A_o$$

where

E = maximum energy absorbed and

A_o = equivalent capacity.

Total energy E is given as

$$E = \tfrac{1}{2} (GI^2)_{equivallent} (\omega_2^2 - \omega_1^2) \qquad (B.3)$$

$$= \sum_{i=1}^{N_s} \tfrac{1}{2} (GI^2)_i \; (\omega_{2i}^2 - \omega_{1i}^2)$$

where

$(GI^2)_{eq}$ = equivalent rotational inertia of the system about any shaft,

ω_2 = final angular velocity and

ω_1 = initial angular velocity.

To calculate maximum energy of the clutch, that path in the ray diagram is considered for which different intermediate

shafts and spindles accelerate to maximum speed from rest when clutch is energised. One such path of the ray diagram for the first clutch in Fig.1.3 is shown in Fig. 1.4 by thick line.

B.3.2 Angular Velocity of Different Components:

All the components on a shaft do not rotate at the same angular velocity. This is illustrated by Fig. B.4. M and A represent the magnetic body and armature respectively. The magnetic body of the clutches 1 and 2 and the gears fixed to them are free to rotate on the shafts. When first clutch is engaged, the components S_1, M_1, A_2, and Z_{11} rotate with speed S_{11} with the shaft. But the idling parts M_2 and Z_{12} rotate at a speed of S where

$$S = R_{11} \cdot \frac{U_{11}}{U_{12}} = R_{11} \cdot e$$

Therefore total energy required to accelerate the 1st shaft from rest is

$$E_1 = \tfrac{1}{2} (I_1 \omega_{11}^2)$$

$$= \tfrac{1}{2} (I_1 \omega_{11}^2 + I_2 e^2 \cdot \omega_{11}^2) \qquad \text{(B.4)}$$

$$= \tfrac{1}{2} \omega_{11}^2 (I_1 + I_2 \cdot e^2)$$

$$= \tfrac{1}{2} \omega_{11}^2 (I_1)_{\text{equivallent}}$$

e^2 is the factor by which the (GD^2) values of idlly rotating part should be multiplied to give same speed of all the components on that shaft.

Such considerations have been taken into account in programming.

B.4 Design of Keys :

Keys are used to fix different components to the shaft. In large number of cases the predominant cause of failing of keys is crushing.

The crushing area Ab is given by

$$Ab = \frac{F_r \; p_d}{d \cdot \; c} \qquad (B.5)$$

where

F_r = Maximum gear load

p_d = pitch circle dia. of the gear

d = dia. of the shaft.

c = allowable stress in crushing.

Only A_b is tabulated here and helps the designer to choose length and width of the key depending on the suitable type of the key.

B.5 Correction of Gear Tooth :

The number of gear teeth which have been obtained from the optimisation programme shall have non integer values

in general. They must be rounded off to the next integer with a view that the final speeds at spindle do not change by more than 2%. From strength considerations, if the pinions are given positive corrections, their strength increases at the cost of already overdesigned gears. Total correction X_T required to accomodate the modified number of teeth is given as

$$X_T = \frac{\text{Inv}(\alpha) - \text{Inv}(\alpha_o) \cdot (Z_a' + Z_b')}{2 \tan(\alpha_o)} \qquad \text{(B.6)}$$

where

Z_a' = modified number of teeth in pinion.

Z_b' = modified number of teeth in gear.

α_o = Initial pressure angle

α = modified pressure angle

$$= \tan^{-1}\left(\frac{1 - Q^2}{Q}\right)$$

and

$$Q = \frac{(Z_a' + Z_b')}{Z_a + Z_b} \cdot \tan \alpha_o$$

where

Z_a = unmodified number of teeth in pinion

Z_b = unmodified number of teeth in gear.

B.6 Inspection Data :

Depending on number of teeth, pitch diameter and quality of the gear the inspection data are generated from the empirical relationships.

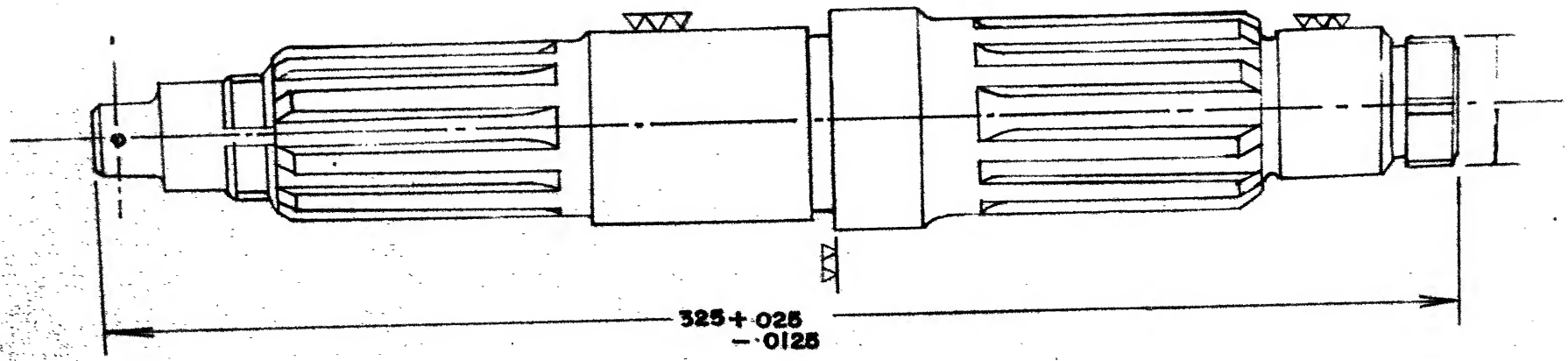

TYPICAL GEAR BOX SHAFT

FIG · B·1

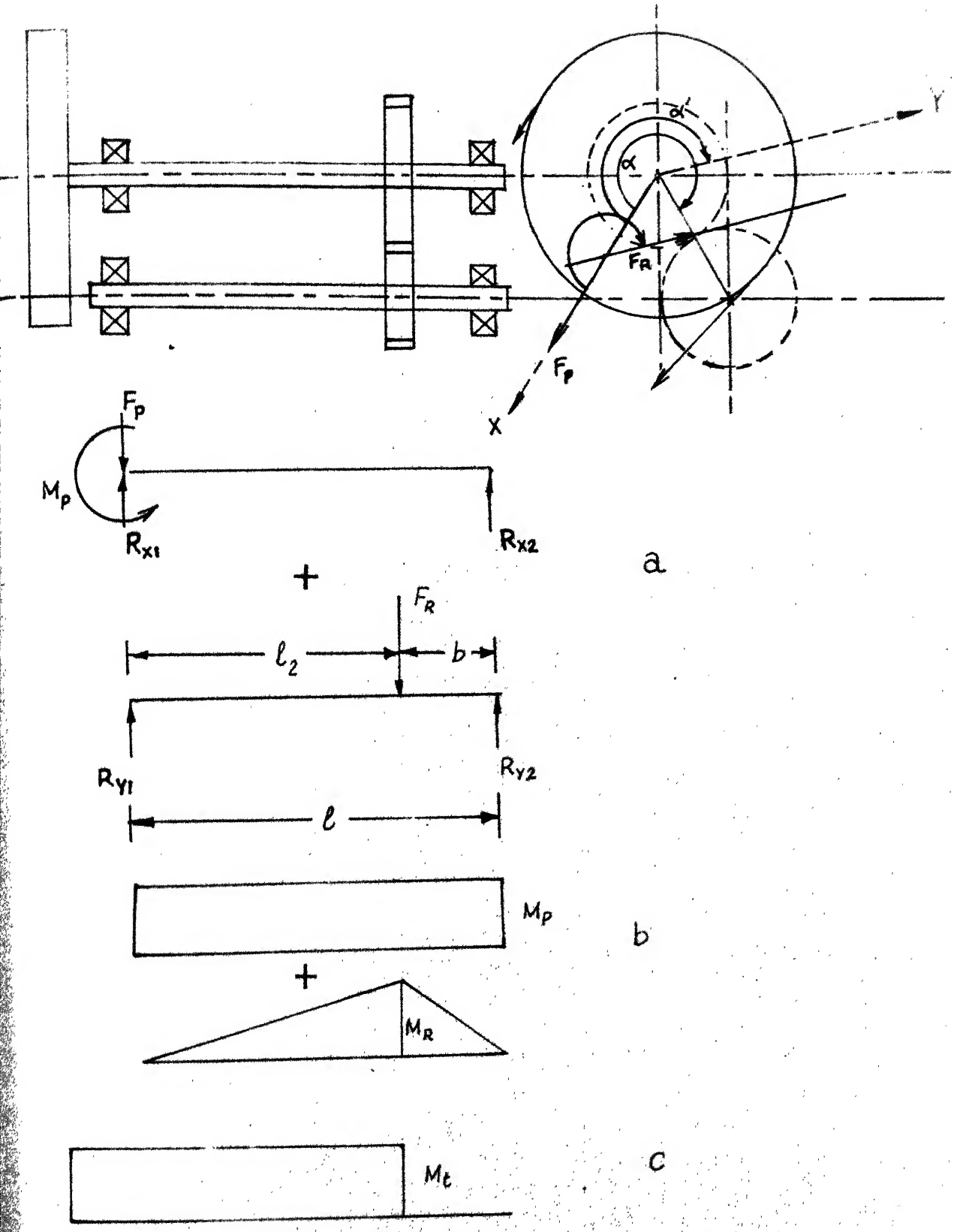

LOADING FOR FIRST SHAFT

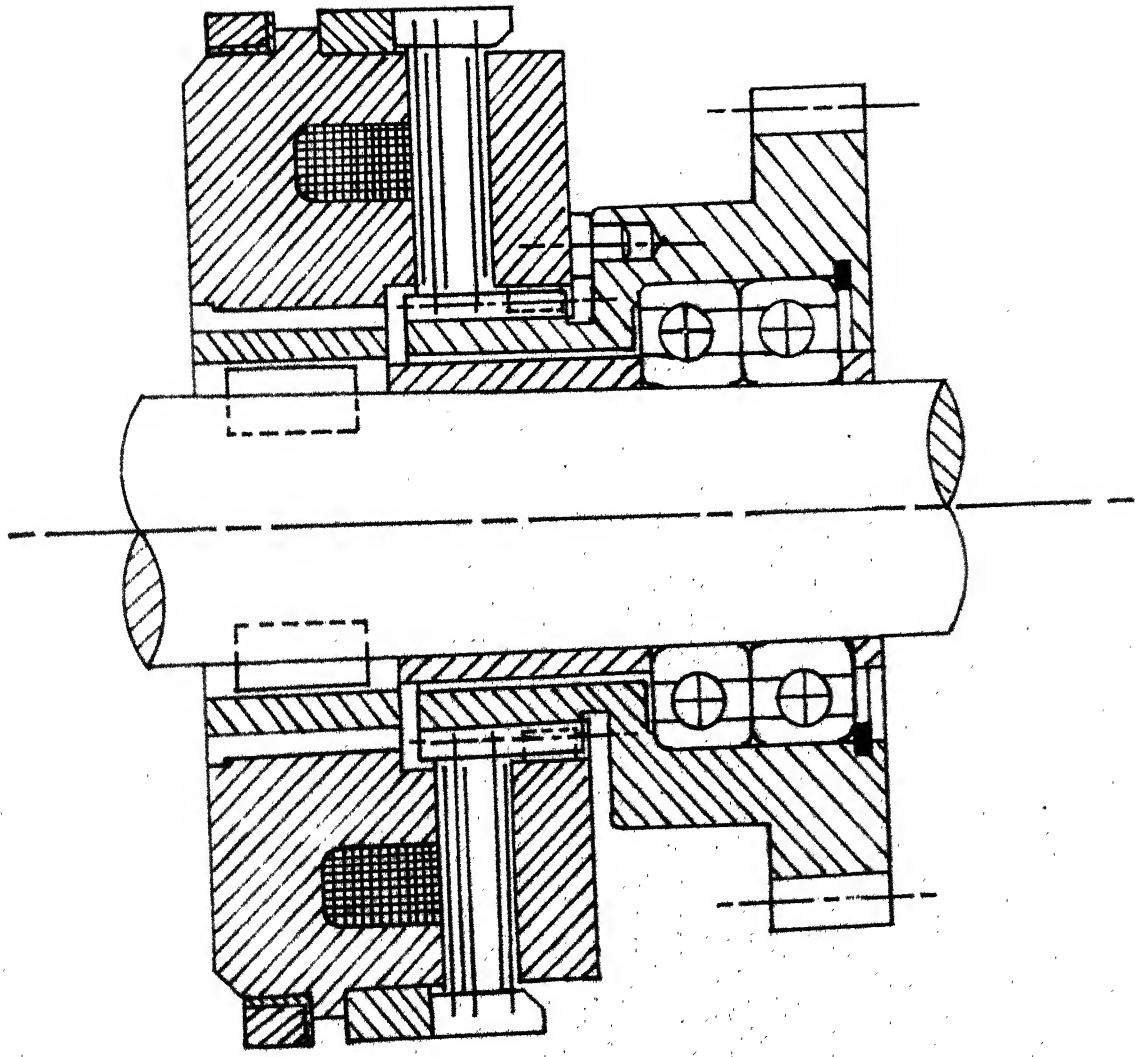

ELECTROMAGNETIC CLUTCH

FIG-B3

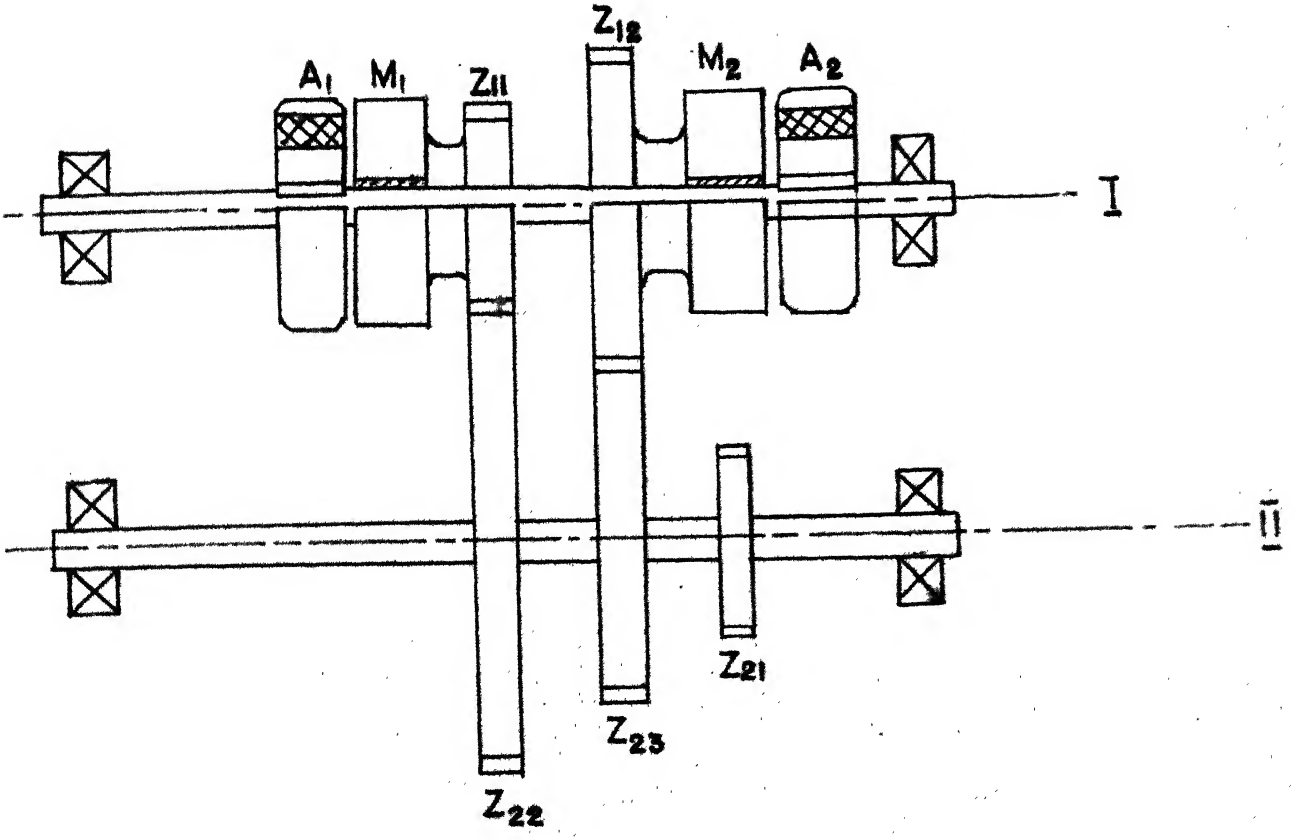

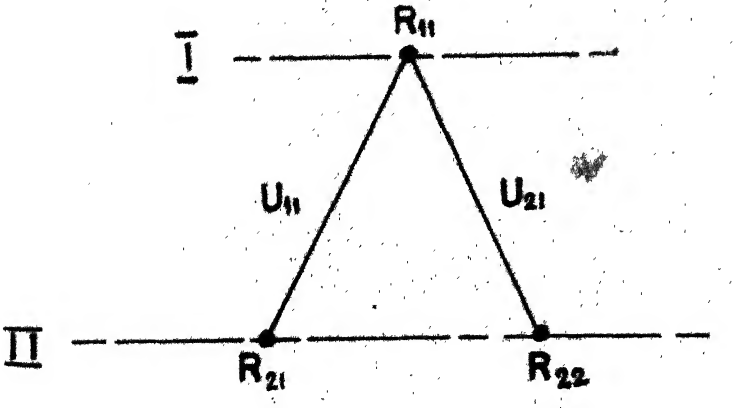

FIG. 8.4

APPENDIX C

COMPUTER PROGRAMME

This appendix gives the descriptions of fourteen subroutines which add up to make the optimised design of gear box complete. A listing of each subroutine and a general flow diagram is also included. The input and output formats are described and a part of output listing is printed.

C.1 The Programme:

The programming has been split in two phases. Optimisation and Design. The first part is carried out in main routine which requires another seven subroutines to reach its end. Second phase is carried out in the subroutine "Design" which needs the optimum design vector from Main as input information and requires yet another five subroutines for component design.

The purpose of different subroutines together with the necessary input for them follows in the subsequent paragraphs.

C.1.1 Main :

Purpose: To read the input data as given in Art. A.4.2
To extrapolate the Design vector for a new starting point (to be used in subroutine "UNCONS") and to stop iterations when convergence criteria are satisfied.

C.1.2 Name of the Subroutine RECG

Purpose: To recognise the groups which can have independent number of teeth and module value for one of the driver gears and to calculate the factors which are needed in the calculation of transmission ratios in case there happens to be two composite gear in the first group.

Input : The configuration of the gear box read in the main viz. groups, speeds, composite gears, back gears are transferred to this subroutine by main through common statements.

C.1.3 Name of the subroutine - ADJST (X)

Purpose : To correspond different design variables X_i's in the relevant elements of the matrices representing transmission ratios, number of teeth and module values and to remodify different elements of the matrices from the compatibility considerations.
This subroutine is called every time when the change in design vector takes place.

Input : First input is present design vector. The configuration of the gear box transferred by the common statement and output from routine "RECG" are also the input informations.

C.1.4 Name of the subroutine PENAL (FO, FT, FP, X,N, R, GX)

Purpose : To calculate the value of the objective function and to evaluate the normalised constraints as specified in the article (C.2). To set the value of penalty function as 10^{30} whenever a constraint is violated (this identifies a acceptable solution from unacceptable one).

Input : The present design vector, number of variables and the value of r in the unconstrained minimisation are the inputs to this subroutine. For every evaluation of constraint the subroutine first calls the subroutine "ADJST" to modify different matrices, used in the constraint evaluation.

C.1.5 Name of subroutine UNCONS (X, N, R)

Purpose : To carryout unconstrained minimisation for any r value in the sequence of r minimisation. In process, to identify a situation as whether to modify H-matrix or not and to stop iteration when the convergence criteria are satisfied.

Input : This subroutine is called from Main everytime when r is reduced. Starting design vector, number of design variables and the value of r are the input informations. This subroutine uses three other subroutines, namely PENAL, SEARCH, HMATRI at different stages. Convergence limits are transfered from Main through common statements.

C.1.6 Name of the subroutine, SEARCH (SIG, X, R, N)

Purpose : To carry out one dimensional minimisation of P (σ) and evaluate a step size which makes the penalty function minimum in the present direction of move, using third order interpolation. This subroutine is called from Main each time a new direction is found out.

Input : The new direction and the present value of design vector are input here. Convergence criterion has been permanently defined in the subroutine itself.

C.1.7 Name of the Subroutine GRAD (G, X, N, R)

Purpose : To calculate the gradient at any point in the design space by forward interpolation.

This is called from UNCONS every time a step in the old direction is taken and a new Design vector is reached.

Input : Inputs are the present value of $\bar{X}$ and number of design variables. The step length used in the forward difference scheme is permanently defined in the subroutine.

C.1.8 Name of the subroutine HMATRI (H, SIG, N)

Purpose : To modify the Hessian matrix used to calculate the direction of move at every point. Every time step size in the previous direction meets the convergence requirements, this subroutine is called from UNCONS.

Input : Inputs for the subroutine are the present Hessian matrix, the value of step in the previous move, the difference of the present and previous gradient vector and the number of variables.

C.1.9 Name of the Subroutine : DESIGN

Purpose : To round-off the modules of gears in different groups to the next standard module available. Round off the number of teeth of different gears to make it an integer.

Distribute corrections on the gears and generate inspection data . To calculate percentage deviation of each output speed from the desired speed and generate design data for clutches, shafts, bearings, keys.

Input : The final matrices of number of teeth, modules and transmission ratios obtained at the optimum design variable is input in the programme.

C.1.10 Name of subroutine : CORREC (ZP,ZB,TRANS,XT,XP,XG)

Purpose : To distribute the total correction on the penion and gear for achieving the compatibility. The informations about the graphs in I.S. (3756) used for this purpose is permanently defined in the subroutine in Data statement. This subroutine is called for correction of each pair of gears.

Input : The total correction value obtained from Design, rounded number of teeth in gears and pinions and the transmission ratio between them.

C.1.11 Name of the subroutine - INSPEC (Z,DP,X,V,AM,IQLTY)

Purpose : To calculate the number of teeth over which

the measurement is to be taken and to print, upper, lower and nominal value of tolerences for each gear.

Input : The input informations are the number of gear, its diameter. Corrections on it and the quality of the gear.

C.1.12 Name of subroutine : SHBG

Purpose : To obtain shaft diameters and basic dynamic capacities of all the bearings used in the gear box considering all possible loading arrangements of the shaft. To calculate maximum bending moment and deflection under the worst condition of loading for each shaft.

Input : The input informations are the approximate distance of gears from left hand bearing, the number of driver gears in each group, belt and cutting forces, Young's elasticity, allowable value of stresses (in bending and torsion), efficiency of each drive, approximate lengths of the shafts and the life of bearings desired.

C.1.13 Name of subroutine : SINGLE (F1, F2, XL, DIS1, DIS2, AN, TORQ, ALH)

Purpose : To calculate the equivalent bending moment, deflection and the basic dynamic capacities of the bearing in a case when shaft is loaded by an overhung force.

Input : Magnitudes and points of application of the driver and the driven forces, angle between the forces, torque required to be transmitted and the working life of bearing.

C.1.14 Name of subroutine : CLUTCH

Purpose : To select a suitable clutch at the required places and to calculate the thermal utilisation of the clutch selected.

Input : Input for the subroutine is the number of teeth, module values and face width of the gears, length of shafts, specific weight of the material, speed diagram, indication of the portion (magnetic body or armature) attached to a gear and manufacturer's data for the clutches. These are permanently read in the clutch programme in data statements.

C.2 Input to the main programme :

The required input data is described below in the order in which it is read. The Fortran symbolic representation is given on the left and an explanation on the right.

Identifier		Explanation
NSPD	-	Total number of spindle speeds.
NSH	-	Number of shafts in the gear box.
IBGSH	-	Name of back gear shaft. If there is no back gear shaft then IBGSH=0.
ILAP	-	Number of steps by which the lowest speed of a shaft preceding back gear shaft is lagging to the speed transfered to the same shaft by clutch coupling. (This is 4 in Fig. 1.4). Put zero if no back gear shaft is present.
NGMAX	-	Maximum number of gears that is possible on any shaft. Count 2 in case there is a composite gear.
IQLTY	-	Quality of the gears desired to be used in the main drive.
HP	-	Rated horse power capacity.
ETA	-	Efficiency of the drive at each stage.

Identifier		Explanation
RPMI	-	Input Motor speed.
RPML	-	Lowest desired spindle speed.
RPMH	-	Highest desired spindle speed.
TMAX	-	Maximum allowable torque.
IP ( )	-	Number of pairs of gears in each group.
ICAR ( )	-	Characteristic of each group.
ICOMP (,)	-	Composite gears = 0 if the driver or the driven gear is not a composite gear. = I where I is the order number of the transmission it produces.
.NOCL.	-	= = .TRUE. if no clutch in the drive. = .FALSE. if there is clutch.
ICL (,)	-	Read only when NOCL = .FALSE. = 0 when gear is not attached to the clutch. = 1 if armature is keyed to the gear. = 2 if magnetic body is keyed to this gear.
ANG ( )	-	Included angle between two adjacent shafts.
ALSH ( )	-	Approximate length of the shafts.

Identifier		Explanation
DIS (,)	-	Approximate distances of the gears from left hand bearing.
GDCH	-	GD^2 - value of chuck.
GDP	-	GD^2 - value of Pulley.
RHO	-	Specific weight of carbon steel.
PLF	-	Pulley force.
CUTF	-	Maximum cutting force.
DSP	-	Distance of the Pulley from left hand bearing.
DSJ	-	Distance of the job from right hand bearing.
AAMOD ( )	-	A column of standard module-value from 1 to 10.
SC	-	Material factor
HOUR	-	Hours per day each gear is expected to remain active. (Approximate value).
CF	-	Factor by which the values of r should be divided each time.
SENS	-	Sensitivity factor for the objective function.
N	-	Number of independent design variables.

Identifier	Explanation
N	- Number of independent design variables.
XMIN ( )	- Minimum value of independent design variables.
SPAN ( )	- Maximum spread of independent design variables.
X1 ( )	- Independent design variable (initial value).
SIGT	- Allowable stress in torsion.
SIGC	- Allowable stress in crushing.
SIGB	- Allowable stress in bending.
SIGW	- Allowable working stress.
FSC	- Factor, stress concentration.
FNUT	- Nutsc. factor
FS	- Factor of safety.
E	- Young's modulus
ALH	- Desired bearing life in hours.
EPS1	- Required accuracy in penalty function.
EPS2	- Required accuracy in design variables.
EPS3	- Required accuracy in one dimensional minimisation.
EPS4	- Required accuracy in the object function.
ITIR	- Number of iterations in minimisation for a particular r.

C.3 Programme Output:

The input data is written out in the same format in which it is read.

Other outputs are presented with self explaining headings.

C.4 Programme listing and sample output:

The subsequent pages contain the listing of all the subroutines and a portion of output.

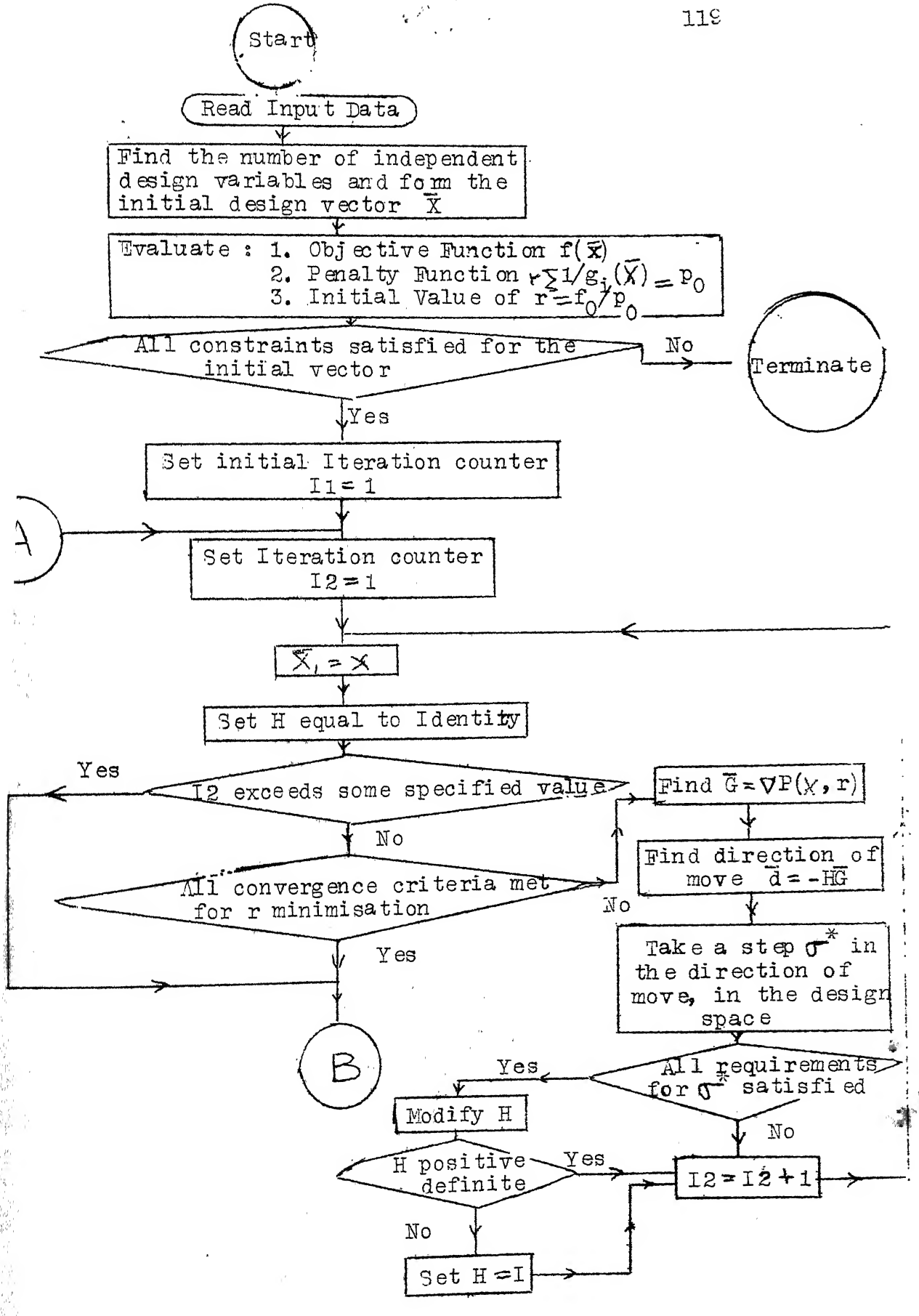
Start
Read Input Data
Find the number of independent design variables and form the initial design vector $\bar{X}$
Evaluate : 1. Objective Function $f(\bar{x})$
2. Penalty Function $r\sum 1/g_i(\bar{X}) = p_0$
3. Initial Value of $r = f_0/p_0$
All constraints satisfied for the initial vector
No
Terminate
Yes
Set initial Iteration counter I1 = 1
A
Set Iteration counter I2 = 1
$\bar{X}_1 = X$
Set H equal to Identity
Yes
I2 exceeds some specified value
No
All convergence criteria met for r minimisation
Yes
B
Find $\bar{G} = \nabla P(X, r)$
Find direction of move $\bar{d} = -H\bar{G}$
No
Take a step σ^* in the direction of move, in the design space
All requirements for σ^* satisfied
Yes
Modify H
H positive definite
Yes
No
Set H = I
No
I2 = I2 + 1

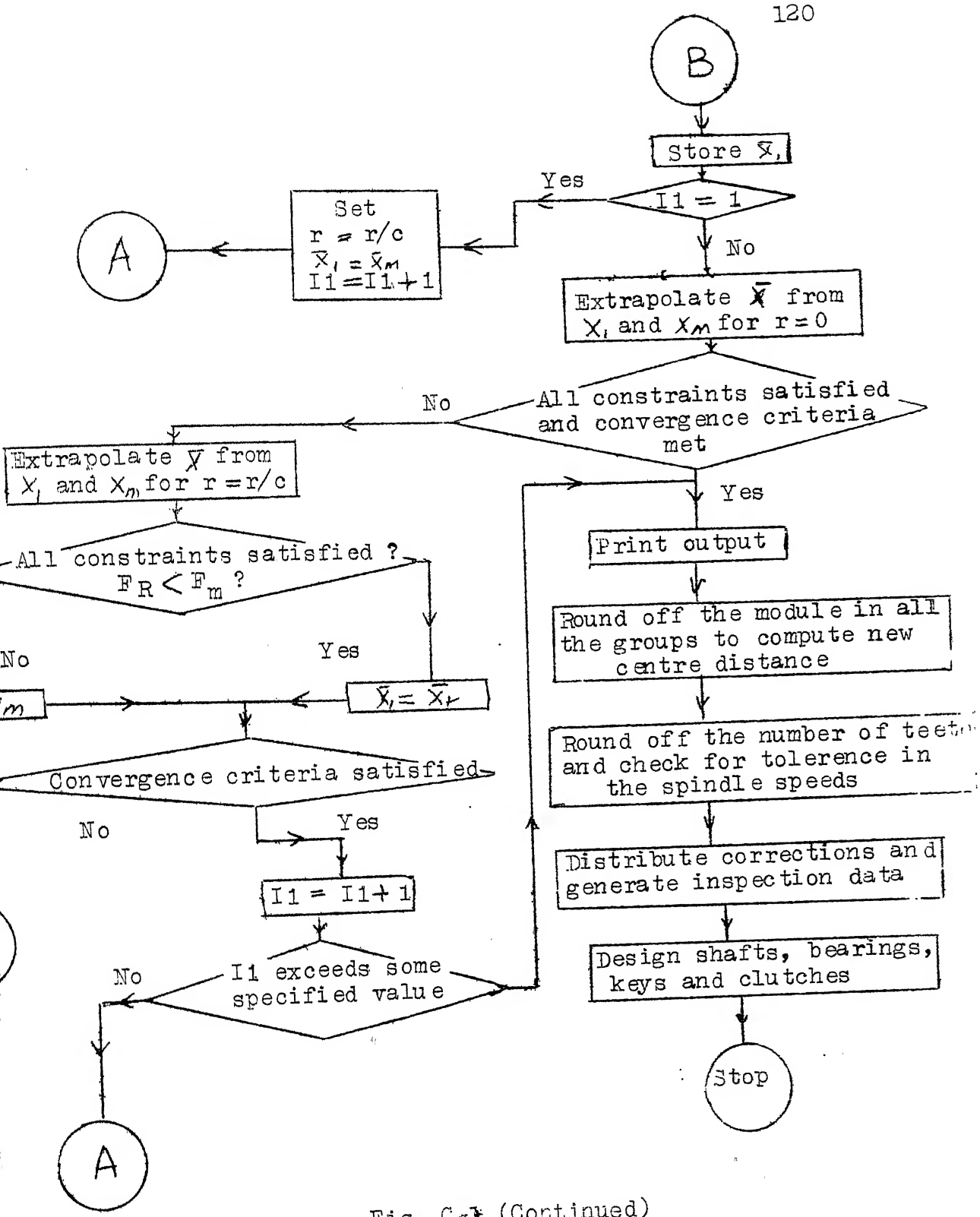

Fig. C.1 (Continued)

```
$JOB
$FTC MAIN
      LOGICAL NOCL
      COMMON/LAB2/NSPD,NSH,IBGSH,ILAP,NGMAX
      COMMON/LAB3/HP,ETA,RPMI,RPML,RPMH,TMAX,PHI
      COMMON/LAB5/IP,ZS,SPD
      COMMON/LAB6/ICL,ICAR
      COMMON/LAB9/AM,TR,DSH,ALSH
      COMMON/LAB10/ANG,DIS
      COMMON/LAB13/ ICOMP,SPDM
      COMMON/LAB15/ CORR
      COMMON/LAB32/SPAN,XMIN    ,SENS
      COMMON/LAB34/NC
      COMMON/LAB35/CZ,SC,RTL
      COMMON/LAB42/G
      COMMON/LAB44/CEN,AREA
      COMMON/LAB46/AAMOD
      COMMON/LAB47/ EPPS1,EPS2,EPS3,EPS4,ITIR
      COMMON /LAB50/ SIGT,SIGB,SIGC
      DIMENSION AM(6,6),TR(6,6),CEN(6),AAMOD(24),SPD(6,6),SPDM(6,6),
     1IP(6),DSH(6),ICOMP(6,6),ZS(6,6),AREA(6,6),ALSH(6),ANG(6),DIS(6,6),ICL(3,
     2ICL(3,6),ICAR(6),CORR(6,6)
      DIMENSION X(11),X1(11),XR(11),XL(11),XO(11),GX(100),G(11)
      DIMENSION XMIN(11),SPAN(11),XM(11)
 6    FORMAT (/,1 X,* EXTRAPOLATED VALUES OF VARIABLES AT NEXT R-VALUE*,
     1/,2(1 X,5F10.6/))
 17   FORMAT(1X,6I6)
 3    FORMAT (///,1 X,* NORMALISED OPTIMUM DESIGN VARIABLES*,/
     12(1 X,5F10.6/))
 5    FORMAT (/,1 X,* ACTUAL DESIGN VARIABLES*,/,2(1 X,5F10.4/))
 27   FORMAT(1X,6F10.2)
 37   FORMAT(1X,3F12.6)
 4    FORMAT (*        INITIAL VALUE OF R=*,F10.2)
 77   FORMAT(1X,6F11.3)
 87   FORMAT(1X,4F9.2)
 97   FORMAT(1X,6F8.1)
 117  FORMAT(1X,10F6.1)
 127  FORMAT (12F6.3)
 137  FORMAT(1X,6I6)
 147  FORMAT(1X,15I4)
 157  FORMAT(1X,30I2)
 167  FORMAT (1X,I3)
 177   FORMAT (1X,3F5.2)
 187  FORMAT (1X,9F6.2)
 197  FORMAT (1X,L1)
 207  FORMAT (1X,2F8.3)
 217   FORMAT (1X,4F7.3,I4)
 227  FORMAT (1X,2F5.1)
 500  FORMAT (* OBJECT FUNCTION *,F10.2,/
     1* PENALTY *,F10.2,/,
     2* TOTAL FUNCTION*,F10.2)
 501  FORMAT (1 X,* DESIGN VARIABLES*,/,2(1 X,5F10.6/))
 502  FORMAT (1 X,* CONSTRAINTS*,/,20(1 X,5F10.6/))
 504  FORMAT (1X,80(1H-))
 503  FORMAT (1 X,* GRADIENT VECTOR*,/,2(1 X,5F10.6/))
 506  FORMAT (1X,*NUMBER OF TEETH IN GEARS*,/1X,(1X,6F10.2/))
```

```
507   FORMAT (1X,*LOEST TRANSMISSIONS FROM THE GROUPS*,/ 1X,6F10.4)
508   FORMAT (1X,* CENTRE DISTANCE=*,6F8.2)
      READ 17,NSPD,NSH,IBGSH,ILAP,NGMAX,IQLTY
      PRINT17,NSPD,NSH,IBGSH,ILAP,NGMAX,IQLTY
      READ 27,HP,ETA,RPMI,RPML,RPMH,TMAX
      PRINT27,HP,ETA,RPMI,RPML,RPMH,TMAX
      READ 137,(IP(I),I=1,NSH)
      PRINT137,(IP(I),I=1,NSH)
      READ 137,(ICAP(I),I=1,NSH)
      PRINT137,(ICAP(I),I=1,NSH)
      READ 157,((ICOMP(I,J),J=1,NGMAX),I=1,NSH)
      PRINT157,((ICOMP(I,J),J=1,NGMAX),I=1,NSH)
      READ 197,NOCL
      PRINT197,NOCL
      IF (NOCL) GO TO 237
      READ 147,((ICL(I,J),J=1,NGMAX),I=1,3)
      PRINT147,((ICL(I,J),J=1,NGMAX),I=1,3)
237    CONTINUE
      READ 97,(ANG(I),I=1,NSH)
      PRINT97,(ANG(I),I=1,NSH)
      READ 97,(ALSH(I),I=1,NSH)
      PRINT97,(ALSH(I),I=1,NSH)
      READ 117,((DIS(I,J),J=1,NGMAX),I=1,NSH)
      PRINT117,((DIS(I,J),J=1,NGMAX),I=1,NSH)
      READ 37,GDCH,GDP,RHO
      PRINT37,GDCH,GDP,RHO
      READ 87,PLF,CUTF,DSP,DSJ
      PRINT87,PLF,CUTF,DSP,DSJ
      READ 127,(AAMOD(I),I=1,24)
      PRINT127,(AAMOD(I),I=1,24)
      READ 207,SC,HOUR
      PRINT207,SC,HOUR
      READ227,CF   ,SENS
      PRINT 227,CF ,SENS
      READ 167,N
      PRINT167,N
      READ 187,(XMIN(I),I=1,N),(SPAN(I),I=1,N)
      PRINT187,(XMIN(I),I=1,N),(SPAN(I),I=1,N)
      READ 187,(X1(I),I=1,N)
      PRINT187,(X1(I),I=1,N)
      READ 77,SIGW,FSC,FNUT,FS,E,ALH
      PRINT77,SIGW,FSC,FNUT,FS,E,ALH
      READ 1 77,SIGT,SIGC,SIGB
      PRINT1 77,SIGT,SIGC,SIGB
      READ 217,EPS1,EPS2,EPS3,EPS4,ITIR
      PRINT217,EPS1,EPS2,EPS3,EPS4,ITIR
      RTL = RPML/RPMI
      NGRP = NSH-1
      ANSPD = NSPD
      ANSPD = ANSPD-1.0
      T = 1.0/ANSPD
      PHI = (RPMH/RPML)**T
      CZ = 0.8442*(HOUR-0.821)**0.218-1.385
      CALL RECG
      DO 505 I = 1,N
505   X1(I) = (X1(I)-XMIN(I))/SPAN(I)
      CALL PENAL (FO,FP,FT,X1,N,1.0,GX)
```

```
      IF (FT.GT.10.0E+20) GO TO 448
      DO 43 I = 1,NC
43    IF(GX(I).LT.0.2) FP = FP+5.0-1.0/GX(I)
      PRINT 500,FO,FP,FT
      PRINT 502,(GX(I),I=1,NC)
      R = FO/FP
      PRINT 44,R
      L3 = 0
1     CALL UNCONS(X1,N,R)
      DO 5 I = 1,N
5     XM(I) = X1(I)
      CALL PENAL (FO,FP,FT,XM,N,R,GX)
      PRINT 500,FO,FP,FT
      PRINT 501,(XM(I),I=1,N)
      PRINT 502,(GX(I),I = 1,NC)
      PRINT 503,(G(I),I=1,N)
      PRINT 506,((ZS(I,J),J=1,NGMAX),I=1,NSH)
      PRINT 507,(TR(I,1),I=1,NGRP)
      PRINT 508,(CEN(I),I=1,NGRP)
      PRINT 504
      L3 = L3+1
      IF (L3.EQ.1) GO TO 6
      IF(ABS((FO-FLO)/FO).LT.EPS4) GO TO 50
9     SS = ABS((FT-FL)/FL)
      IF(SS.GT.EPS1) GO TO 3
      DO 10 I = 1,N
      A1 = ABS((XM(I)-XL(I))/XL(I))
      IF(A1.GT.EPS2) GO TO 3
10    CONTINUE
      DO 11 I = 1,N
11    XO(I) = (CF**0.5*XM(I)-XL(I))/(CF**0.5-1.0)
      CALL PENAL(FO,FP,FT1,XO,N,R,GX)
      IF (FT1.GT.10.0E+20) GO TO 3
      IF (FT1.GT.FT) GO TO 3
      SS = ABS((FT1-FT)/FT)
      IF (SS.GT.0.001) GO TO 3
      DO 12 I = 1,N
      A1 = ABS((XO(I)-XM(I))/XM(I))
      IF (A1.GT.0.001) GO TO 3
12    CONTINUE
      GO TO 26
6     RL = R
      DO 7 I = 1,N
7     XL(I) = XM(I)
      FLO = FO
      FL = FT
      R = R/CF
      DO 8 I = 1,N
8     X1(I) = XM(I)
      GO TO 1
3     RL = R
      FL = FT
      FLO = FO
      R = R/CF
      DO 15 I = 1,N
```

```
      XR(I) = XM(I)+1.0/CF**0.5*(XM(I)-XL(I))
      PRINT 16,(XR(I),I=1,N)
      CALL PFNAL (FO,FP,FT2,XR,N,R,GX)
      IF (FT2.GT.10.0E+20) GO TO 18
      DO 19 I = 1,N
      X1(I) = XR(I)
      GO TO 1
      DO 21 I = 1,N
      X1(I) = XM(I)
      GO TO 1
      CONTINUE
      DO 51 I = 1,N
      XO(I) = X1(I)
      PRINT 23,(XO(I),I=1,N)
      DO 24 I = 1,N
      XO(I) = XO(I)*SPAN(I)+XMIN(I)
      PRINT 25,(XO(I),I=1,N)
      CALL DESIGN
      STOP
      END


FTC ADJST
      SUBROUTINE ADJST(X)
      DIMENSION ID1(2),ID2(2),IK(6),X(11)
      DIMENSION AM(6,6),TR(6,6),CEN(6),AAMOD(24),SPD(6,6),SPDM(6,6),
     1IP(6),DSH(6),ICOMP(6,6),ZS(6,6),AREA(6,6),ALSH(6),ANG(6),DIS(6,6),ICL(3,
     2ICL(3,6),ICAR(6),CORR(6,6)
      COMMON/LAB2/NSPD,NSH,IBGSH,ILAP,NGMAX
      COMMON/LAB3/HP,ETA,RPMI,RPML,RPMH,TMAX,PHI
      COMMON/LAB5/IP,ZS,SPD
      COMMON/LAB6/ICL,ICAR
      COMMON/LAB9/AM,TR,DSH,ALSH
      COMMON/LAB10/ANG,DIS
      COMMON/LAB13/ ICOMP,SPDM
      COMMON/LAB15/ CORR
      COMMON/LAB17/MX1,MX2,FS1,ICTWO,ITV,IK,ID1,ID2
      COMMON/LAB34/NC
      COMMON/LAB35/CZ,SC,RTL
      COMMON /LAB33/FO
      COMMON/LAB44/CEN,AREA
      COMMON/LAB46/AAMOD
      NGRP = NSH-1
      DO 46 I = 1,NSH
      DO 46 J = 1,NGMAX
      ZS(I,J) = 0.1
      TR(I,J) = 0.1
      AM(I,J) = 0.1
      SPD(I,J) = 0.1
      SPDM(I,J) = 0.1
      AREA(I,J) = 0.1
46    CONTINUE
      DO 100 I = 1,ITV
      K = IK(I)
      ZS(K,1) = X(2*I-1)
```

```
)   AM(K,1) = X(2*I)
    NDV = ITV*2+1
    IF(ICTWO.EQ.0)GO TO 110
    S1 = X(NDV)*FS1
    TR(1,1) = (S1*PHI**MX2*(PHI**MX1-1.0)-(PHI**MX2-1.0))/(PHI**MX2-PHI**MX-
   1I**MX1)/PHI**(ID1(1)-1)
    TR(2,1) = S1/TR(1,1)
    GO TO 120
0   TR(1,1) = X(NDV)
    NDV = NDV+1
    TR(2,1) = X(NDV)
0   DO 130 I = 3,NGRP
    IF(I.EQ.NGRP) GO TO 140
    IF (I. EQ.IBGSH) GO TO 150
    NDV = NDV+1
    TR(I,1) = X(NDV)
    GO TO 130
0   TR(I,1) = 1.0/TR(I-1,1)/PHI**ILAP
    GO TO 130
40  SUM = 1.0
    NGRP1 = NGRP-1
    DO 160 J = 1,NGRP1
50  SUM = SUM*TR(J,1)
    TR(I,1) = RTL/SUM
30  CONTINUE
    BB = RPMI
    AA = RPMI
    DSH(1) = 1.25*(716.0*HP*1000.0/AA/2.       )**0.3333
    DO 169 I = 1,NGRP
    K = IP(I)
    DO 170 J = 1,K
    K1 = IP(I+1)+J
    TR(I,J) = TR(I,1)*PHI**(ICAR(I)*(J-1))
    TR(I+1,K1) = 1.0/TR(I,J)
    SPD(I,J) = AA
    SPDM(I,J) = BB
    SPD(I+1,K1) = AA*TR(I,J)
170 SPDM(I+1,K1) = BB*TR(I,J)
    AA = AA*TR(I,1)
    TORQ = 716.0*HP*1000.0/AA*ETA**I
    IF (TORQ.GT.TMAX) TORQ = TMAX
    DSH(I+1) = 1.25*(TORQ/2.       )**0.3333
169 BB = BB*TR(I,K)
    DO 180 I = 1,NGRP
    K = IP(I)
    IF (I.NE.IBGSH) GO TO 220
    CEN(I) = CEN(I-1)
    AM(I,1) = AM(I-1,1)
    DO 230 J = 1,K
    J1 = IP(I+1)+J
    ZS(I,J) = 2.0*CEN(I)*TR(I,J)/AM(I,1)/(TP(I,J)+1.0)
    ZS(I+1,J1)= ZS(I,J)/TR(I,J)
    AM(I,J) = AM(I,1)
    AM(I+1,J1) = AM(I,1)
230 CONTINUE
```

```
      GO TO 180
      I1 = 0
      I2 = 0
      DO 190 J = 1,K
      K1 = IP(I+1)+J
      IF(ICOMP(I,J).NE.0) I1 = ICOMP(I,J)
      IF(ICOMP(I+1,K1).EQ.0) GO TO 190
      JF = K1
      I2 = ICOMP(I+1,K1)
190    CONTINUE
      IF(I1.NE.0) GO TO 180
      Z1 = ZS(I,1)
      K2 = IP(I+1)+1
      ZS(I+1,K2) = ZS(I,1)/TR(I,1)
      Z2 = ZS(I+1,K2)
      CEN(I) = (Z1+Z2)*AM(I,1)/2.0
      DO 200 J = 1,K
      K1 = IP(I+1)+J
      ZS(I,J) = (Z1+Z2)*TR(I,J)/(1.0+TR(I,J))
      ZS(I+1,K1) = ZS(I,J)/TR(I,J)
      AM(I,J) = AM(I,1)
      AM(I+1,K1) = AM(I,1)
200   CONTINUE
      IF(I2.EQ.0) GO TO 180
      ZS(I+1,I2) = ZS(I+1,JF)
      I3 = IP(I+2)+I2
      ZS(I+2,I3) = ZS(I+1,I2)/TR(I+1,I2)
      Z1 = ZS(I+1,I2)
      Z2 = ZS(I+2,I3)
      CEN(I+1) = (Z1+Z2)*AM(I,1)/2.0
      K = IP(I+1)
      DO 210 J = 1,K
      J1 = IP(I+2)+J
      ZS(I+1,J) = (Z1+Z2)*TR(I+1,J)/(1.0+TR(I+1,J))
      ZS(I+2,J1) = ZS(I+1,J)/TR(I+1,J)
         AM(I+1,J) = AM(I,1)
      AM(I+2,J1) = AM(I,1)
210   CONTINUE
180    CONTINUE
      FQ = 0.0
      DO 45 I = 1,NGRP
45    FQ = FQ+CEN(I)
      RETURN
      END

$IBFTC RECG
      SUBROUTINE RECG
      DIMENSION IK(6),ID1(2),ID2(2)
      DIMENSION AM(6,6),TR(6,6),CEN(6),AAMOD(24),SPD(6,6),SPDM(6,6),
     1IP(6),DSH(6),ICOMP(6,6),ZS(6,6),AREA(6,6),ALSH(6),ANGT(6),DIS(6,6),ICL(3,
     2ICL(3,6),ICAR(6),CORR(6,6)
      COMMON/LAB2/NSPD,NSH,IBGSH,ILAP,NGMAX
      COMMON/LAB3/HP,ETA,RPMI,RPML,RPMH,TMAX,PHI
      COMMON/LAB5/IP,ZS,SPD
      COMMON/LAB6/ICL,ICAR
      COMMON/LAB9/AM,TR,DSH,ALSH
```

```
      COMMON/LAB10/ANG,DIS
      COMMON/LAB13/ ICOMP,SPDM
      COMMON/LAB15/ CORR
      COMMON/LAB17/MX1,MX2,FS1,ICTWO,ITV,IK,ID1,ID2
      COMMON/LAB44/CEN,AREA
      COMMON/LAB46/AAMOD
      NGRP = NSH-1
      ITV = 0
      ICTWO = 0
      NDV = 0
      DO 100 I = 1,NGRP
      I1 = IP(I)
      IF(I.EQ.IBGSH) GO TO 100
      INDG = 0
      DO 110 J = 1,I1
110   IF(ICOMP(I,J).NE.0) INDG = INDG+1
      IF (INDG.NE.0) GO TO 100
      NDV = NDV +1
      ITV = ITV +1
      IK(NDV) = I
100   CONTINUE
      IF(IP(1).LT.2.OR.IP(2).LT.2)RETURN
      I1 = 0
      I2 = IP(1)
      DO 120 J = 1,I2
      J1 = IP(2)+J
      IF (ICOMP(2,J1).EQ.0) GO TO 120
      I1 = I1+1
      ID1(I1) = J
      ID2(I1) = ICOMP(2,J1)
120    CONTINUE
      IF (I1.NE.2) RETURN
      ICTWO = 1
      MX1 = ICAR(1)*IABS(ID1(1)-ID1(2))
      MX2 = ICAR(2)*IABS(ID2(1)-ID2(2))
      RETURN
      END
$IBFTC SUB3
      SUBROUTINE HMATRI(H,SIG,N)


$IBFTC SEARCH
      SUBROUTINE SEARCH(SIG,X,N,R)
      COMMON/LAB34/NC
      COMMON/LAB23/D
      DIMENSION X(9),X1(9),D(9),GX1(100),GX2(100)
      COMMON/LAB24/GX1,GX2
      JJ = 0
      II = 0
      ST = 0.0
      DO 1 I = 1,N
      X1(I) = X(I)
      IF(ABS(D(I)).GT.ST) ST = ABS(D(I))
 1    CONTINUE
      ST = 0.001/ST
      CALL PENAL (FO,FP,FT1,X,N,R,GX1)
```

```
      DO 2 I = 1,N
      X(I) = X1(I)+D(I)*ST
2     CONTINUE
      CALL PENAL (FO1,FP,FT,X,N,R,GX2)
      PTC = 0.02*FO
      GA = FO1/ST-FO/ST
      A = 0.0
      DO 3 I=1,NC
3     GA = GA-((GX2(I)-GX1(I))/ST)/GX1(I)**2
      D2 = -PTC*2.0/GA
      D2 = AMIN1(1.0,D2)
5     L1 = 0
      DO 20 I = 1,N
      X(I) = X1(I)+D2*D(I)
      IF (X(I).LT.0.0.OR.X(I).GT.1.0) L1=L1+1
20    CONTINUE
      IF (L1.NE.0) GO TO 40
      CALL PENAL (FO1,FP,FT2,X,N,R,GX1)
      C = D2
      IF (FT2.LT.10.0E+20) GO TO 18
      D1 = D1/2.0
      IF(D1.GT.0.000001) GO TO 5
      SIG = 0.0
      RETURN
4     DO 13 I = 1,N
      X(I) = X1(I)
13    X(I) = X1(I)+D2*D(I)
      CALL PENAL (FO1,FP,FT2,X,N,R,GX1)
      IF (FT2.LT.10.0E+20) GO TO 18
      D2 = D2/1.5
      IF (D2.GT.C) GO TO 4
      B = C
      GB= GC
      FT2 = FT3
      GO TO 8
18    CONTINUE
      DO 6 I = 1,N
6     X(I) = X(I)+D(I)*ST
      CALL PENAL (FO2,FP,FT,X,N,R,GX2)
      GB = (FO2-FO1)/ST
      B = (X(1)-X1(1))/D(1)
      DO 7 I = 1,NC
7     GB = GB-((GX2(I)-GX1(I))/ST)/GX1(I)**2
      JJ = JJ+1
      IF (JJ.NE.1) GO TO 21
      GC = GB
      FT3 = FT2
      C = B
21    IF (GB.GT.0.0.OR.GB.GT.GA) GO TO 8
      GA = GB
      A = B
      FT1 = FT2
      D2 = 2.0*D2
      GO TO 4
8     Z = 3.0*(FT1-FT2)/(B-A)+GA+GB
```

```
      W = (Z**2-GA*GB)**0.5
      SIG = B-(GB+W-Z)/(GB-GA+2.0*W)    *(B-A)
      IF (SIG.GT.A.AND.SIG.LT.B) GO TO 50
      SIG = A
      GO TO 51
   50 CONTINUE
      II = II+1
      DO 10 I = 1,N
      X(I) = X1(I)+SIG*D(I)
      CALL PENAL (FO4,FP,FT4,X,N,R,GX1)
      DO 11 I = 1,N
      X(I) = X(I)+D(I)*ST
      CALL PENAL (FO5,FP,FT,X,N,R,GX2)
      GC = (FO5-FO4)/ST
      DO 14 I =1,NC
      GC = GC-((GX2(I)-GX1(I))/ST)/GX1(I)**2
      IF (GC.GT.0.0.OR.GC.GT.GA) GO TO 15
      GA = GC
      A = SIG
      FT1 = FT4
      GO TO 16
      GB = GC
      B = SIG
      FT2 = FT4
   15 IF (II.LT.2) GO TO 8
   16 CONTINUE
      DO 97 I = 1,N
      X(I) = X1(I)
      RETURN
      END


$FTC PENAL
      SUBROUTINE PENAL(FO,FP,FT,X,N,R,GX)
      DIMENSION X(11),GX(100),SPAN(11),XMIN(11),X1(11)
      DIMENSION AM(6,6),TR(6,6),CEN(6),AAMOD(24),SPD(6,6),SPDM(6,6),
     1IP(6),DSH(6),ICOMP(6,6),ZS(6,6),AREA(6,6),ALSH(6),ANG(6),DIS(6,6),ICL(3,
     2ICL(3,6),ICAR(6),CORR(6,6)
      COMMON/LAB2/NSPD,NSH,IBGSH,ILAP,NGMAX
      COMMON/LAB3/HP,ETA,RPMI,RPML,RPMH,TMAX,PHI
      COMMON/LAB5/IP,ZS,SPD
      COMMON/LAB6/ICL,ICAR
      COMMON/LAB9/AM,TR,DSH,ALSH
      COMMON/LAB10/ANG,DIS
      COMMON/LAB13/ ICOMP,SPDM
      COMMON/LAB15/ CORR
      COMMON/LAB32/SPAN,XMIN   ,SENS
      COMMON/LAB34/NC
      COMMON/LAB35/CZ,SC,RTL
      COMMON /LAB33/FQ
      COMMON/LAB44/CEN,AREA
      COMMON/LAB46/AAMOD
      NGRP = NSH-1
      F1(X,C) = X**(-0.185)*EXP(-C)
      F2(X) = 0.0294*X-1.3+0.000169*X**2
      F3(X) = 0.222-0.00204*X+0.0000115*X**2
       F4(X) = -0.00461 +0.0000653*X+0.0000003*X**2
      NC = 0
```

```
      DO 1 I =  1,N
      NC = NC+1
      GX(NC) = X(I)
      X1(I) = X(I)
      X(I)  = X1(I)*S PAN(I)+XMIN(I)
      CALL ADJST(X)
      DO 2 I = 1,NGRP
      I1 = IP(I)
      NC = NC+1
      GX(NC) = 1.0-0.25/TR(I,1)
      NC = NC+1
      GX(NC) = 1.0-TR(I,I1)/2.0
      NC = NC+1
      GX(NC) = 1.0-1.75/AM(I,1)
      NC = NC+1
      GX(NC) = 1.0-AM(I,1)/10.0
      DO 3 J = 1,I1
      J1 = IP(I+1)+J
      NC = NC+1
      GX(NC) = 1.0-14.0/ZS(I+1,J1)
      NC = NC+1
      GX(NC) = 1.0-ZS(I,J)/120.0
      NC = NC+1
      GX(NC) = 1.0-ZS(I+1,J1)/120.0
      NC = NC+1
      GX(NC) = 1.0-DSH(I)/(0.8*(ZS(I,J)-2.35)*AM(I,J))
      NC = NC+1
      GX(NC) = 1.0-DSH(I+1)/(0.8*(ZS(I+1,J1)-2.35)*AM(I+1,J1))
      NC = NC+1
      GX(NC) = 1.0-14.0/ZS(I,J)
      YZ = F2(ZS(I+1,J1))+F3(ZS(I+1,J1))*ZS(I,J)+F4(ZS(I+1, J1))*ZS(I,J)**2
     1*2
      STK = F1(SPD(I,J),CZ)*YZ*SC*9.0*AM(I,J)**2.8*SPD(I,J)*ZS(I,J)
     1/25.4**0.8/1.0E+8*1774.0

      NC = NC+1
      GX(NC) = 1.0-HP/STK
      STK = F1(SPD(I+1,J1),CZ)*YZ*SC*9.0*AM(I+1,J1)**2.8*SPD(I+1,J1)*ZS(I+1,J
     1I+1,J1)/25.4**0.8/1.0E+8*1774.0
      NC = NC+1

      GX(NC) = 1.0-HP/STK
      CONTINUE
      CONTINUE
3     FORMAT (1X,5E15.3)
      XX = GX(1)
      DO 8 I = 1,NC
      IF(XX.GE.GX(I))XX=GX(I)
      CONTINUE
      IF(XX.LT.0.0) GO TO 9
      SUM = 0.0
      DO 10 I = 1,NC
0     SUM = SUM+R/GX(I)
      FP = SUM
      FO = FQ
      FO=FO**SENS
```

```
      FT = FO+FP
      GO TO 11
      FT = 10.0E+30
 1    DO 5 I = 1,N
      X(I) = X1(I)
      RETURN
      END


BFTC GRAD
      SUBROUTINE GRAD(X,N,G,R)
      DIMENSION X(11),GX1(100),GX2(100),G(11)
      COMMON/LAB34/NC
      COMMON/LAB24/GX1,GX2
      CALL PENAL(FO,FP,FT,X,N,R,GX1)
      DO 2 I = 1,N
      A = X(I)
      ST = AMIN1(0.001,A/1000.0)
      X(I) = X(I)+ST
      CALL PENAL (FO1,FP,FT,X,N,R,GX2)
      G(I) = (FO1-FO)/ST
      DO 3 J=1, NC
      G(I) = G(I)-((GX2(J)-GX1(J))/ST)/GX1(J)**2
 3    CONTINUE
      X(I) = X(I)-ST
 2    CONTINUE
      RETURN
      END


BIBFTC UNCONS
      SUBROUTINE UNCONS(X,N,R)
      DIMENSION Y(11),D(11),GX(100),X(11),G(11),G1(11),H(11,11)
      COMMON/LAB38/Y
      COMMON/LAB23/D
      COMMON/LAB42/G
      COMMON/LAB47/ EPPS1,EPS2,EPS3,EPS4,ITIR
 15   FORMAT (*            COUNTER NOT SUFFICIENT FOR MINIMISATION*)
 16   FORMAT (*          NORMAL CONVERGENCE AFTER*,I3,*  ITIRATION*)
 24   FORMAT (* STEP=*,E12.2,*          COSINE=*,F9.6,*  I D I=*,F6.3)
 25   FORMAT (* DIRECTION*,5E11.5,/,10X,5E11.3)
 26   FORMAT (1X, *VARIABLES*,10F6.3)
 28        FORMAT (* MINIMISATION OVER  R=*,F11.3)
 29   FORMAT (* GRADIENTS*,5E11.3,/,10X,5E11.5)
 51   FORMAT (* STEP LENGTH LESS THAN 0.01X-MIN WAS OBTAINED FOR N TIMES*
     1*,/,* STOPING MINIMISATION FOR THIS R AT *,I5,*  ITIRATIONS*)
      PRINT 28,R
      PRINT 26,(X(I),I=1,N)
      L7 = 0
      L1 = 0
      CALL PENAL(FO,FP,FT,X,N,R,GX)
      IF(FT.GT.10.0E20) GO TO 17
      CALL GRAD( X,N,G,R)
      PRINT 29, (G(I),I=1,N)
```

```
      DO 5 I3 = 1,N
      DO 5 I2 = 1,N
      H(I2,I3) = 0.0
      H(I3,I3) = 1.0
      DO 6 I1 = 1,N
      D(I1) = 0.0
      DO 6 I2 = 1,N
      D(I1) = D(I1)-H(I1,I2)*G(I2)
      PRINT 25, (D(I),I=1,N)
      S9 = 0.0
      CXCX = 1.0E-4
      DO 10 I = 1,N
      S9 = S9+D(I)*G(I)
      IF(S9.LT.0.0) GO TO 2
      DO 23 I2 = 1,N
      IF(H(I2,I2).NE.1.0)GO TO 1
23    CONTINUE
      PRINT 132,L1,R
132   FORMAT (15X,*DERIVATIVE OF FUNCTION ALONG DIRECTION OF *,/,15X,
     1*LINEAR MINIMISATION IS NOT NEGATIVE AT*,I4,*  ITIRATION FOR R=*,
     2F10.6)
      RETURN
2     CONTINUE
      XMM = 1.0
      DO 199 I = 1,N
      IF (XMM.GT.X(I)) XMM = X(I)
199    CONTINUE
      XMM = XMM/100.0
      CALL SEARCH(SIG,X,N,R)
      IF (SIG.LT.XMM) L7=L7+1
      IF (L7.GT.5) GO TO 50
      DO 7 I1= 1,N
      X(I1) = X(I1)+SIG*D(I1)
7     G1(I1) = G(I1)
      L1 = L1+1
      IF (L1.GT.ITIR) GO TO 14
      CALL PENAL (FO,FP,FT1,X,N,R,GX)
      FT = FT1
      CALL GRAD(X,N,G,R)
      PRINT 29, (G(I),I=1,N)
      ET = AMAX1(1.0,SIG)
      L2 = 0
      DO 3 I = 1,N
      IF(ABS(ET*D(I)).LT.0.001) GO TO 3
      L2 = L2+1
3     CONTINUE
      IF(L2.EQ.0) GO TO 13
      S1 = 0.0
      S2 = 0.0
      S3 = 0.0
      DO 11 I = 1,N
      S1 = S1+G(I)**2
      S2 = S2+D(I)**2
11    S3 = S3+G(I)*D(I)
      S2 = SQRT(S2)
```

```
      S1 = SQRT(S1)
      CS = ABS(S3/S2/S1)
      PRINT 24,SIG,CS,S2
      PRINT 26,(X(I),I=1,N)
      IF (SIG.LE.10.0E-6) GO TO  1
      IF (S1.LE.CXCX.OR.S2.LE.CXCX) GO TO 13
  151 DO 9 I1 = 1,N
 9    Y(I1) = G(I1)-G1(I1)
      SUM2 = 0.0
      DO 156 I = 1,N
      SUM1 = 0.0
      DO 157 J = 1,N
 157   SUM1 = SUM1+X(J)*H(J,I)
 156    SUM2 = SUM2+X(I)*SUM1
      A = SUM2
      IF(A.LT.0.0) GO TO 1
      CALL HMATRI(H,SIG,N)
      GO TO 8
 50   PRINT51,L1
      GO TO 17
 14   PRINT 15
      GO TO 17
 13      PRINT 16,L1
 17      RETURN
      END


$IBFTC HMAT
      SUBROUTINE HMATRI(H,SIG,N)
      COMMON/LAB23/D
      COMMON/LAB38/Y
      DIMENSION H5(11),H9(11,11),H10(11,11),HS(11)
      DIMENSION H6(11,11),H(11,11),Y(11),D(11),H4(11)
      H1=0.
      DO1I = 1,N
      H1 = H1+D(I)*Y(I)
      H5(I) = 0.0
      H4(I) = 0.0
      DO 1 J = 1,N
      H4(I) = H4(I)+H(I,J)*Y(J)
      H5(I) = H5(I)+H(J,I)*Y(J)
 1    H9(I,J) = D(I)*D(J)
      H11 = 0
      DO2I = 1,N
      H11 = H11+Y(I)*H4(I)
      DO 2 J = 1,N
  2   H10(I,J) = H4(I)*H5(J)
      DO 3 I = 1,N
      DO 3 J = 1,N
      H6(I,J) = H(I,J)+SIG/H1*H9(I,J)-H10(I,J)/H11
 3    CONTINUE
      DO 5 I = 1,N
      DO 5 J = 1,N
 5    H(I,J) = H6(I,J)
      RETURN
      END
```

```
      ZG = IZG
      IF ((ZS(I,J)-ZP).GE.0.5)ZP = ZP+1.0
      IF((ZS(I+1,J1)-ZG).GE.0.5)ZG = ZG+1.0
      ZS(I,J) = ZP
      ZS(I+1,J1) = ZG
      TRNS = ZP/ZG
C     ESTIMATION OF TOTAL CORRECTION,XT=2X
      Q=AM(I,J)*(ZP+ZG)*COS(ALFA)/(2.0*CEN(I))
      A3=ATAN(SQRT(1.0-Q**2)/Q)
      XT=(TAN(A3)-A3-TAN(ALFA)+ALFA)*(ZP+ZG)/(2.0*TAN(ALFA))
      PRINT 8,XT
      IF (ICOMP(I,J).NE.0) GO TO 43
C     DISTRI BUTION OF TOTAL CORRN. BETWEEN PINION AND GEAR
      CALL CORREC (ZP,ZG,TRNS,XT,XP,XG)
      CORR(I,J) = XP
      CORR(I+1,J1) = XG
      I4 = ICOMP(I+1,J1)
      IF(I4.NE.0) CORR(I+1,I4)= CORR(I+1,J1)
      GO TO 44
 43   CORR(I+1,J1) = XT-CORR(I,J)
      PRINT 47,J,I
      PRINT 762,ZP,XP,ZG,XG
      DP2 = AM(I+1,J1)*ZG
      DP1 = AM(I,J)*ZP
      V = 3.1416*SPD(I,J)*DP1/60000.0
      X1 = CORR(I,J)
      X2 = CORR(I+1,J1)
      PRINT 139,I,J
      IN=I+1
C     CALC. OF M-MEASUREMENT DATA
      CALL INSPEC(ZP,DP1,X1,V,AM(I,J),IQLTY)
      PRINT 139,IN,J1
      CALL INSPEC(ZG,DP2,X2,V,AM(I,J),IQLTY)
 41   CONTINUE
 40   CONTINUE
      DO 100 I = 1,NGRP
      I1 = IP(I)
      DO 100 J = 1,I1
      J1 = IP(I+1)+J
 100   TR(I,J) = ZS(I,J)/ZS(I+1,J1)
      I2 = 0
      I3 = 1
      FSPD(1) = RPMI
      FSPDL(1) = FSPD(1)
      DO 120 I = 1,NGRP
      I1 = IP(I)
      I4 = I3
      I3 = 0
      DO 130 J = 1,I1
      DO 130 K = 1,I4
      I3 = I3+1
      FSPDL(I3) = FSPD(K)*TR(I,J)
 130   CONTINUE
      IF (I. NE. IBGSH) GO TO 140
      DO 150 M = 1,I4
```

```
150   FSPDP(M) = FSPD(M)
      N1 = I4
140   IF((I-1).NE.IBGSH) GO TO 160
      DO 170 M = 1,N1
      I3 = I3+1
170   FSPDL(I3) = FSPDP(M)
160   DO 180 M = 1,I3
180   FSPD(M) = FSPDL(M)
120   CONTINUE
      I4 = I3
 201   X = 0.0
      I = 1
218   IF (X.GE.FSPDL(I)) GO TO 219
      X = FSPDL(I)
      N = I
219   I = I+1
      IF (I.LE.I3) GO TO 218
      FSPDL(N) = FSPDL(I3)
      FSPDL(I3) = X
      I3 = I3-1
      IF (I3.GT.1) GO TO 201
      PRINT 401
      J = 0
      DO 402 I = 1,I4
      IF (I.EQ.I4) GO TO 403
      IF (INT(FSPDL(I)).EQ.INT(FSPDL(I+1))) GO TO 402
403   J = J+1
      P1 = RPML*PHI**(J-1)
      P = (P1-FSPDL(I))/P1*100.0
      PRINT 404,J,P1,FSPDL(I),P
402   CONTINUE
      SIGAL = 15.0
      DO 45 K = 1,NGRP
      L1 = IP(K)
      DO 46 L = 1,L1
      TORQ = 716.0*HP*ETA**K/SPD(K,L)*1000.0
      IF (TORQ.GT.TMAX) TORQ=TMAX
      TLD = TORQ/DSH(K)/2.0
      AREA(K,L) = TLD/SIGAL
      AREA(K+1,L1) = AREA(K,L)*DSH(K+1)/DSH(K)
46    CONTINUE
45    CONTINUE
      PRINT 398,((AREA(K,L),L=1,NGMAX),K=1,NSH)
      CALL SHBG
      CALL CLUTCH
      RETURN
      END


$IBFTC CORREC
      SUBROUTINE CORREC(ZP,ZG,TRNS,XT,XP,XG)
      DIMENSION XM(12),SLP(12),XM1(13),SLP1(13)
      DATA XM/-0.35,-0.25,-0.14,-0.05,0.08,0.17,0.26,0.38,0.50,0.62,
     10.72,0.84/
      DATA SLP/-.8935,-.7535,-.6085,-.4835,-.3775,-.2735,-.1762,-.0906,
     1-.00436,+.0567,+.1351,+.1942 /
```

```
      DATA XM1/-0.38,-0.18,-0.12,-0.06,0.00,0.07,0.15,0.23,0.34,0.44,
     10.57,0.72,0.90 /
      DATA SLP1 / -0.3060,-0.0559,-0.0436,-0.0174,0.0,0.0332,0.0663,
     10.1050,0.1620,0.2325,0.3305,0.4750,0.6850 /
      X=XT/2.0
C     DISTRIBUTION OF CORRECTION
      ZZ=(ZP+ZG)/2.0
      IF(TRNS .GT. 1.0) GO TO 731
C     FOR SPEEDING DOWN PAIR OF GEARS
      XX1=SLP(1)*(ZZ-40.0)/50.0+XM(1)-X
      DO 735 N=2,12
      XX2=SLP(N)*(ZZ-40.0)/50.0+XM(N)-X
      IF(XX1*XX2) 736,736,734
  734 XX1=XX2
  735 CONTINUE
  736 SL=SLP(N-1)-XX1*(SLP(N)-SLP(N-1))/(XX2-XX1)
      GO TO 751
C     FOR SPEEDING UP PAIR OF GEARS
  731 IF(X .GE. (-0.3)) GO TO 732
      IF(ZZ .GT. 50.0) GO TO 739
  732 XX1=SLP1(1)*(ZZ-40.0)/50.0+XM1(1)-X
      DO 795 N=2,13
      XX2=SLP1(N)*(ZZ-40.0)/50.0+XM1(N)-X
      IF(XX1*XX2) 737,737,738
  738 XX1=XX2
  795 CONTINUE
  737 SL=SLP1(N-1)-XX1*(SLP1(N)-SLP1(N-1))/(XX2-XX1)
  751 XP=SL*(ZP-ZZ)/50.0+X
      XG=XT-XP
      GO TO 761
  739 XP=X
      XG=X
  761 RETURN
      END


$IBFTC INSPEC
      SUBROUTINE INSPEC(Z,DP,X,V,AM,IQLTY)
C     Z=NO. OF TEETH, X=CORRECTION
C     CALC. NO. OF TEETH,AN OVER WHICH MEASUREMENT IS TAKEN
 135   FORMAT (10X,*MEASUREMENT OVER*,I4,3X,*TEETH*/
     1        10X,*NOMINAL VALUE=*,F9.3,3X,*MM*,/
     2       10X,*LOWER LIMIT=*,F9.3,3X,*MM*,/
     3        10X,*UPPER LIMIT=*,F9.3,3X,*MM*,/)
  823 FORMAT(1X,*CAUTION-SURRFACE SPEED EXCEEDS 30M/S*)
      IF(ABS(X) .GE. 0.4) GO TO 810
      AN=Z*20.0/180.0+0.5
      GO TO 811
  810 A=Z/3.1416*SQRT(0.132+4.526*X/Z+4.526*(X/Z)**2)-(Z+2.0*X)*0.116
      AN=Z*20.0/180.0+0.5+A
  811 N=AN
      RN=N
      IF((AN-RN) .GT. 0.5) GO TO 812
      AN=RN
      GO TO 815
  812 AN=RN+1.0
  815 ALFA=20.0*3.1416/180.0
C     CALC. THE NOMINAL VALUE OF MEASUREMENT
      BT=AM*(Z*COS(ALFA)*(TAN(ALFA)-ALFA)+(AN-0.5)*3.1416*COS(ALFA)
     1+2.0*X*SIN(ALFA))
C     SELECTING TOLERANCES DEPENDING ON QLTY. AND DIAMETER OF GEAR
      IF(DP.LE. 50.0) GO TO 101
```

```
      GO TO 815
  812 AN=RN+1.0
  815 ALFA=20.0*3.1416/180.0
C     CALC. THE NOMINAL VALUE OF MEASUREMENT
      BT=AM*(Z*COS(ALFA)*(TAN(ALFA)-ALFA)+(AN-0.5)*3.1416*COS(ALFA)
     1+2.0*X*SIN(ALFA))
C     SELECTING TOLERANCES DEPENDING ON QLTY. AND DIAMETER OF GEAR
      IF(DP.LE. 50.0) GO TO 101
      IF(DP.LE.100. ) GO TO 104
      IF(DP.LE.200.0) GO TO 106
  101 IF(IQLTY .EQ. 8) GO TO 109
      IF(IQLTY .EQ. 7) GO TO 110
      IF(IQLTY .EQ. 6) GO TO 111
      IF(IQLTY .EQ. 5) GO TO 112
  109 TOLL=-75.0
      TOLU=-45.
      IQLTY=8
      GO TO 130
  110 TOLL=-62.
      TOLU=-41.
      IQLTY=7
      GO TO 130
  111 TOLL=-60.0
      TOLU=-45.
      IQLTY=6
      GO TO 130
  112 TOLL=-52.
      TOLU=-41.
      IQLTY=5
      GO TO 130
  104 IF(IQLTY .EQ. 8) GO TO 105
      IF(IQLTY .EQ. 7) GO TO 107
      IF(IQLTY .EQ. 6) GO TO 115
      IF(IQLTY .EQ. 5) GO TO 117
  105 TOLL=-85.
      TOLU=-51.
      IQLTY=8
      GO TO 130
  107 TOLL=-70.
      TOLU=-47.
      IQLTY=7
      GO TO 130
  115 TOLL=-68 .
      TOLU=-51.
      IQLTY=6
      GO TO 130
  117 TOLL=-56.
      TOLU=-49.
      IQLTY=5
      GO TO 130
  106 IF(IQLTY .EQ. 8) GO TO 119
      IF(IQLTY .EQ. 7) GO TO 121
      IF(IQLTY .EQ. 6) GO TO 120
      IF(IQLTY .EQ. 5) GO TO 122
  119 TOLL=-94.
      TOLU=-56.
      IQLTY=8
```

```
      GO TO 130
  121 TOLL=-79.
      TOLU=-53.
      IOLTY=7
      GO TO 130
  120 TOLL=-75.
      TOLU=-56.
      IOLTY=6
      GO TO 130
  122 TOLL=85.
      TOLU=-68.
      IOLTY=5
      GO TO 130
  113 PRINT 823
  130 BTL=BT+TOLL*0.001
      BTU=BT+TOLU*0.001
      NZ=AN
      PRINT 135,NZ,BT,BTL,BTU
      RETURN
      END


$IBFTC SHBG
      SUBROUTINE SHBG
      DIMENSION AM(6,6),TR(6,6),CEN(6),AAMOD(24),SPD(6,6),SPDM(6,6),
     1IP(6),DSH(6),ICOMP(6,6),ZS(6,6),AREA(6,6),ALSH(6),ANG(6),DIS(6,6),ICL(3
     2ICL(3,6),ICAR(6),CORR(6,6)
      COMMON/LABC/RLL,RLR,BEN,EQIVM,BDCLH,BDCRH,DEFT,RP
      COMMON/LAB2/NSPD,NSH,IBGSH,ILAP,NGMAX
      COMMON/LAB3/HP,ETA,RPMI,RPML,RPMH,TMAX,PHI
      COMMON/LAB5/IP,ZS,SPD
      COMMON/LAB6/ICL,ICAR
      COMMON/LAB7/SIGW,FSC,FNUT,FS,E,ALH
      COMMON/LAB8/PLF,CUTF,DSP,DSJ
      COMMON/LAB9/AM,TR,DSH,ALSH
      COMMON/LAB10/ANG,DIS
      COMMON/LAB13/ ICOMP,SPDM
      COMMON/LAB15/ CORR
      COMMON/LAB44/CEN,AREA
      COMMON/LAB46/AAMOD
  175 FORMAT(15X,*DIA. OF SHAFT EXCEEDS ALLOWABLE LIMIT*/)
  177 FORMAT (1X,*DATAS FOR SHAFT*,I3,/,1X,*MAXIMUM DIAMETER=*,F6.0,
     1/,1X,*MAXIMUM DEFLECTION=*,F6.3,/,1X,*RADIAL LOAD LEFT BR=*,F9.0,/
     3,1X,*RADIAL LOAD RIGHT BR=*,F9.0,/1X,*STATIC CAPACITY LEFT BR=*,F9.0
     4.0,/,1X,*STATIC CAPACITY RIGHT BR=*,F9.0,/1X,*DYNAMIC CAPACITY LEFT BR=
     5T BR=*,F9.0,/,1X,*DYNAMIC CAPACITY RIGHT BR=*,F9.0,/,1X, *AVARAGE D
     6DYNAMIC CAP. LEFT  BR=*,F9.0,/*  AVRAGE DYNAMIC CAP.RT BR=*,F9.0,/
     7,1X,*MAXIMUM BENDING MOMENT=*,F9.0,/,1X,*MAXIMUM EQIVALLENT BENDING
     8G MOMENT=*,F9.0)
      NGRP = NSH-1
      RPMIN=716.0*HP*ETA**NSH/TMAX
C     DESIGN STARTS FROM SHAFT 1
      ALFA = 3.1416/20.0
      L=1
  101 RLMXL=0.0
```

```
      RLMXR=0.0
      EQMAX=0.0
      BMAX=0.0
      DCLM=0.0
      DCRM=0.0
      DEFL = 0.C
      ADCR=0.0
      ADCL=0.0
9     ANC=0.0
      IF(L.NE.1.AND.L.NE.NSH) GO TO 10
      IF(L.NE.1) GO TO 11
      I1=1
      I2=IP(1)
      DIS1=DSP
      F1=PLF
      IF(ANG(1).GT.180.0) GO TO 13
      AN = ANG(1)-110.0
      G O TO 12
 13   AN = ANG(1)+110.0
      GO TO 12
 11   I1=1
      I2=IP(NSH-1)
      DIS1=DSJ
      F1 = CUTF
      AN=0.0
 12   DO 14 I=I1,I2
      AM1 = AM(L,I)
      RP=SPD(L,I)
      IF(SPD(L,I) .LT. RPMIN) RP=RPMIN
       TORQ=716.*HP*ETA**L/SPD(L,I)*1000.0
      IF(TORQ.GT.TMAX) TORQ=TMAX
      F2=2.0*TORQ/ZS(L,I)/AM(L,I)/0.937
      XL=ALSH(L)
      DIS2=DIS(L,I)
      CALL SINGLE (F1,F2,XL,DIS1,DIS2,AN,TORQ,ALH)
      IF(RLL.GT.RLMXL) RLMXL=RLL
      IF(RLR.GT.RLMXR) RLMXR=RLR
      IF(EQIVM.GT.EQMAX) EQMAX=EQIVM
      IF(BEN.GT.BMAX) BMAX=BEN
      IF(BDCLH.GT.DCLM) DCLM=BDCLH
      IF(BDCRH.GT.DCRM) DCRM=BDCRH
      IF(DEFT.GT.DEFL) DEFL=DEFT
      ADCR=ADCR+BDCRH
      ADCL=ADCL+BDCLH
      ANC=ANC+1.0
 14   CONTINUE
 505  STAL=  RLMXL*2.0
      STAR=RLMXR*2.0
C     CALC. SHAFT DIA. FOR MAXM. EQV. B.M.AND CHECKING DEFLECTION
      DIA=(32.0*EQMAX*FS/(3.1416*SIGW*FSC/FNUT))**0.3333
 173   DEF = DEFL/(E*3.1416*DIA**4/64.0)
      IF(DEF .LT. 0.015*AM1) GO TO 171
      DIA = DIA+1.0
      IF(DIA.GT.100.0) GO TO 174
      GO TO 173
 171  DIA1 = (EQMAX/2.0)**0.3333
```

```
      IF(DIA1.GT.DIA) DIA = DIA1
      NDIA = DIA
      DIA = NDIA
      DSH(L)=DIA
      IF(L .NE. NSH) GO TO 176
      DIA=1.06*DIA
      DSH(L) = DIA
      GO TO 176
  174 PRINT 175
 176  ADCR=ADCR/ANC
      ADCL=ADCL/ANC
      PRINT 177,L,DIA,DEF,RLMXL,RLMXR,STAL,STAR,DCLM,DCRM,ADCL,ADCR,BMAX
     1,FQMAX
      L=L+1
      IF(L .LE. NSH) GO TO 101
      GOTO 99
C     CALCN. STARTS FOR SHAFTS OTHER THAN 1ST. AND LAST ONES
 10   N1 = IP(L)+1
      N2 = IP(L)+IP(L-1)
      I2 = IP(L)
      DO 16 J = N1,N2
      AM1 = AM(L,J)
      AN = ANG(L)
      RP = SPD(L,J)
      IF (RP.LT.RPMIN) RP = RPMIN
      TORQ = 716.0*HP*ETA**L/SPD(L,J)*1000.0
      IF(TORQ.GT.TMAX) TORQ=TMAX
      FORC = 2.0*TORQ/ZS(L,J)/AM(L,J)/0.937
C     CALC. FOR PARTICULAR SHAFT FOR VARIOUS LOADINGS
      DO 16 I = 1,I2
      FORCE = 2.0*TORQ/ZS(L,I)/AM(L,I)/0.937
      IF(AN-180.0) 17,18,18
 18   AN = AN+40.0
      GO TO 15
 17   AN = AN-40.0
 15   XL = ALSH(L)
C     CHECKING IF ANY FORCE IS OUTSIDE THE SPAN BETN. THE BEARINGS
      IF(DIS(L,I).LT.XL.AND.DIS(L,I).GT.0.0.AND.DIS(L,J).LT.XL.AND.DIS(L,J).
     1,J).GT.0.0) GO TO 19
      IF(DIS(L,I).LT.0.0) GO TO 154
      IF(DIS(L,I).GT.XL) GO TO 155
      IF(DIS(L,J).LT.0.0) GO TO 156
      IF(DIS(L,J).GT.XL) GO TO 157
  154 DIS1=DIS(L,I)
      DIS2=DIS(L,J)
      F1=FORCE
      F2=FORC
      GO TO 159
  155 DIS1=DIS(L,I)-XL
      DIS2=DIS(L,J)
      F1=FORCE
      F2=FORC
      GO TO 159
  156 DIS1=DIS(L,J)
      DIS2=DIS(L,I)
```

```
      F1=FORC
      F2=FORCE
      GO TO 159
  157 DIS1=DIS(L,J)-XL
      DIS2=DIS(L,I)
      F1=FORC
      F2= FORCE
  159 CALL SINGLE (F1,F2,XL,DIS1,DIS2,AN,TORQ,ALH)
      GO TO 168
C     CALC. FOR GEAR FORCES ALL IN BETWEEN THE BEA9INGS
   19 FORCA=FORC*COS(AN/57.3)
      FORCP=FORC*SIN(AN/57.3)
      RR1=-(DIS(L,I)*FORCE+DIS(L,J)*FORCA)/XL
      RL1=-(FORCE+FORCA+RR1)
      RR2=-FORCP*DIS(L,J)/XL
      RL2=-(FORCP+RR2)
      RLR=SQRT(RR1**2+RR2**2)
      RLL=SQRT(RL1**2+RL2**2)
      IF(DIS(L,I)-DIS(L,J)) 21,22,22
   21 K1=1
      FVA=FORCA
      FVP=FORCP
      ARM=DIS(L,I)
      D1=(DIS(L,J)-DIS(L,I))/10.0
      GO TO 23
   22 KL=0
      FVA=FORCE
      FVP=0.0
      ARM=DIS(L,J)
      D1=(DIS(L,I)-DIS(L,J))/10.0
   23 BEN=0.0
C     CALC. B.M.S AT 10 SECTIONS OF SHAFT AND SELECTING THE MAXM. B.M.
      DO 24 M=1,10
      A = M
      ARM=ARM+D1
      BENX=SQRT((RL1*ARM+FVA*A*D1)**2+(RL2*ARM+FVP*A*D1)**2)
      IF(BENX-BEN) 24,25,25
   25 BEN=BENX
   24 CONTINUE
      EQIVM=SQRT((TORQ/2.0)**2+BEN**2)
      BDCRH = (ALH*60.0*RP)**0.3333*RLR/100.0
      BDCLH = (ALH*60.0*RP)**0.3333*RLL/100.0
C     CALC. DEFLECTION AT GEAR POSITIONS
      XLL=XL**2
      DENO=6.0*XL
      B1=XL-DIS(L,I)
      B2=XL-DIS(L,J)
      D11=FORCE*DIS(L,I)*B1*(XLL-DIS(L,I)**2-B1**2)/DENO
      D22=FORC*DIS(L,J)*B2*(XLL-DIS(L,J)**2-B2**2)/DENO
      IF(DIS(L,I).LE.DIS(L,J)) GO TO 26
      D21=FORCE*DIS(L,J)*B1*(XLL-DIS(L,J)**2-B1**2)/DENO
      D12=D21*FORC/FORCE
      GO TO 27
   26 D12=FORC*DIS(L,I)*B2*(XLL-DIS(L,I)**2-B2**2)/DENO
      D21 = D12*FORCE/FORC
   27 D1=(D11**2+D12**2+2.0*D11*D12*COS(AN/57.3))**0.5
      D2=(D22**2+D21**2+2.0*D22*D21*COS(AN/57.3))**0.5
```

```
      DEFT = AMAX1(D1,D2)
 150   CONTINUE
C     CALC. MAXM. DEFLN. BM.,EQV. BM.FOR SHAFT DYN. CAPACITY AND RADIAL
C     LOADS FOR BEARINGS
  168 IF(DEFT.GT.DEFL) DEFL=DEFT
      IF(BDCRH.GT.DCRM) DCRM=BDCRH
      IF(BDCLH.GT.DCLM) DCLM=BDCLH
      IF(BEN.GT.BMAX) BMAX=BEN
      IF(EQIVM.GT.EQMAX) EQMAX=EQIVM
      IF(RLR.GT.RLMXR) RLMXR=RLR
      IF(RLL.GT.RLMXL) RLMXL=RLL
      ADCR=ADCR+BDCRH
      ADCL=ADCL+BDCLH
      ANC=ANC+1.0
  15  CONTINUE
      GO TO 505
   99 RETURN
      END


$IBFTC SINGLE
      SUBROUTINE SINGLE (F1,F2,XL,DIS1,DIS2,AN,TORQ,ALH)
      COMMON/LABC/RLL,RLR,BEN,EQIVM,BDCLH,BDCRH,DEFT,RP
C     CALC. WHEN ONE LOAD IS OUTSIDE THE SPAN BETN. BEARINGS
      B1 = XL-DIS2
      BEN1=F1*DIS1
      RLL2 =-F2*B1/XL
      RLR2=-(F2+RLL2)
      BEN2 = RLL2*DIS2
      T1 =-F1*(ABS(DIS1)+XL)/XL
      T2 =  F1*ABS(DIS1)/XL
      IF(DIS1.LT.0.0) GO TO 200
      RLL =(T2**2+RLL2**2+2.0*T2*RLL2*COS(AN/57.3) )**0.5
      RLR =(T1**2+RLR2**2+2.0*T1*RLR2*COS(AN/57.3))**0.5
      GO TO 201
  200  RLL =(T1**2+RLL2**2+2.0*T1*RLL2*COS(AN/57.3)       )**0.5
      RLR =(T2**2+RLR2**2+2.0*T2*RLR2*COS(AN/57.3)    )**0.5
  201  BEN =(BEN1**2+BEN2**2+2.0*BEN1*BEN2*COS(AN/57.3)  )**0.5
      EQIVM = SQRT((TORQ/2.0)**2+BEN**2)
      DEF1 = F2*B1*DIS2*(XL**2-DIS2**2-B1**2)/6.0/XL
      DEF2 = BEN1*DIS2*B1/4.0
      DEFT =(DEF1**2+DEF2**2+2.0*DEF1*DEF2*COS(AN/57.3)  )**0.5
      BDCRH = (ALH*60.0*RP)**0.3333*RLR/100.0
      BDCLH = (ALH*60.0*RP)**0.3333*RLL/100.0
      RETURN
      END


$IBFTC CLUTCH
      SUBROUTINE CLUTCH
      LOGICAL NOCL
      COMMON/LAB2/NSPD,NSH,IBGSH,ILAP,NGMAX
      COMMON/LAB3/HP,ETA,RPMI,RPML,RPMH,TMAX,PHI
```

```
      COMMON/LAB4/GDCH,GDP,RHO
      COMMON/LAB5/IP,ZS,SPD
      COMMON/LAB6/ICL,ICAR
      COMMON/LAB9/AM,TR,DSH,ALSH
      COMMON/LAB10/ANG,DIS
      COMMON/LAB12/NOCL
      COMMON/LAB13/ICOMP,SPDM
      COMMON/LAB15/ CORR
      COMMON/LAB44 /CEN,AREA
      COMMON/LAB46/AAMOD
      DIMENSION AM(6,6),TR(6,6),CEN(6),AAMOD(24),SPD(6,6),SPDM(6,6),
     1IP(6),DSH(6),ICOMP(6,6),ZS(6,6),AREA(6,6),ALSH(6),ANG(6),DIS(6,6),ICL(3
     2ICL(3,6),ICAR(6),CORR(6,6)
      DIMENSION GDSH(6),GDG(6,6),GDA(3,6),GDB(3,6),AO(3,6),GD(6),FW(6,6)
      DIMENSION TRQ(3,6),AOI(4),GDAI(4),GDBI(4) ,M(3,6),EQIV(3,6),RPM(6) .
      IF (NOCL) RETURN
      DATAAOI,GDAI,GDBI/950.0,1440.0,2200.0,4200.0,0.00215,0.006,0.0213
     1,0.046,0.01125,0.0256,0.0627,0.14447  /
      ASSUMED CLUTCHES EXIST ONLY ON SHAFTS 1 AND 3
  105 FORMAT(//1X,*DESIGN DETAILS OF CLUTCHES*/)
  179 FORMAT (1X,I2,4X,F6.3,4X,F6.3,4X,F9  .2)
  457  FORMAT (1X,* SWITCHING POWER PER OPERATION*,F3.3,* M-KG*)
  541 FORMAT (1X,*CLUTCH*,I3,*  IS OF THE TYPE*,I3,/,1X,*AND ITS THERMAL
     1 UTILISATION IS*,F9.2)
  646 FORMAT (1X,*SHAFT  GD2-VALUE  INITIAL W1  FINAL W2*)
  716 FORMAT (1X,*DATAS FOR *,I3,*  CLUTCH*,//)
      PRINT 105
      ICT = 0
      TMAX=TMAX/1000.0
      NGRP = NSH-1
      DO 999 I = 1,3
      DO 999 J = 1,NGMAX
      GDA(I,J) =0.
      M(I,J) = 0
      AO(I,J) = 0.0
  999 GDB(I,J) = 0.0
C     CALC. GD2 OF ALL SHAFTS AND GEARS AND SUMMING THEM UP FOR SHAFTS OTHER
C     THAN 1,2,3
      DO 106 I = 1,NSH
      GDSH(I) = RHO*3.1416/8.0*DSH(I)**4*ALSH(I)/10.0**6
      SUM = GDSH(I)
      DO 100 J = 1,NGMAX
      FW(I,J) = 9.0*AM(I,J)
      GDG(I,J) = RHO*3.1416/8.0*FW(I,J)*((AM(I,J)*ZS(I,J))**4-DSH(I)**4)
     1/10.0**6
      IF(I.EQ.1.OR.I.EQ.3) GO TO 100
      SUM = SUM+GDG(I,J)
      GD(I) = SUM
  100 CONTINUE
  106 CONTINUE
C     CALC. MAX. TORQUES FOR GEARS TO WHICH GEARS ARE CONNECTED
      DO 200 I = 1,3
      DO 200 J = 1,NGMAX
      IF(ICL(I,J).EQ.0) GO TO 200
      TRQ(I,J) = 716.0*HP*ETA**I/SPD(I,J)
```

```
      IF(TMAX.LT.TRQ(I,J)) GO TO 305
      TOP = TRQ(I,J)
      GO TO 302
 305   TOP = TMAX
 302 CONTINUE
      SELECTING THE CLUTCHES FROM TORQUE CONSIDERATION
      IF(TOP.LE.10.0) GO TO 201
      IF(TOP.LE.20.0) GO TO 202
      IF(TOP.LE.45.0) GO TO 203
      IF(TOP.LE.80.0) GO TO 204
 201 M(I,J)=1
      GO TO 205
 202 M(I,J)=2
      GO TO 205
 203 M(I,J)=3
      GO TO 205
 204 M(I,J)=4
 205 MM=M(I,J)
      AO(I,J)=AOI(MM)
      GDA(I,J)=GDAI(MM)
      GDB(I,J)=GDBI(MM)
 200 CONTINUE
      GO TO 113
503   MM=M(I4,J4)
      AO(I4,J4)=AOI(MM)
      GDA(I4,J4)=GDAI(MM)
      GDB(I4,J4)=GDBI(MM)
C     CHECKING THERMAL UTILISATION FACTORS BEGINS
 113 DO 50 I=1,2
      J2 = IP(1)
      K2 = IP(2)
      GO TO (55,56),I
 55   J1 = 1
      K1 = IP(2)
      GO TO 57
 56   J1 = IP(1)
      K1 = 1
C     LOOP EXECUTED ONCE ONLY FOR 2ND. GROUP CLUTCHES
 57   DO 50 J = J1,J2
      IF (I.EQ.1) ICT = ICT+1
      I1 = 0
C     MAXM. RPM OF SHAFT 1
      RPM(1)=RPMI
      IF(ICL(1,J).NE.0) I1=1
      I2 = IP(2) +J
      IF(ICL(2,I2).NE.0) I1=2
      IF(I1.EQ.0) GO TO 50
      GO TO (58,59),I1
 58   L1= 1
      L2 = IP(1)
C     CALC. EQUIVALENTS FOR IDLY RUNNING GEARS AND CLUTCH PARTS
      DO 60 L = L1,L2
 60   EQIV(1,L) = (TR(1,J)/TR(1,L))**2
 544   FORMAT (2X,*EQUIVALLENT*,5(I2,2X,F7.2))
      GO TO 71
 59   L1 = IP(2)+1
```

```
      L2=IP(1)+IP(2)
      DO 61 L = L1,L2
 61    EQIV(2,L) = (1.0/TR(2,L)/TR(1,J))**2
 71   GD(I1) = GDSH(I1)
      DO 72 L = L1,L2
      IF(ICL(I1,L).EQ.2) GO TO 80
      GD(I1) = GD(I1)+(GDA(I1,L)+GDG(I1,L))*EQIV(I1,L)+GDB(I1,L)
      GO TO 72
  80  GD(I1) = GD(I1)+(GDB(I1,L)+GDG(I1,L))*EQIV(I1,L)+GDA(I1,L)
 72   CONTINUE
C     MAX. RPM OF SHAFT 2
      RPM(2) = RPM(1)*TR(1,J)
C     LOOP EXECUTED ONCE ONLY FOR  1ST. GROUP CLUTCHES
      DO 50 K = K1,K2
      IF (I.EQ.2)ICT = ICT+1
      PRINT 716,ICT
      I3 = 0
      IF(ICL(2,K).NE.0) I3=1
      I2 = IP(3)+K
      IF(ICL(3,I2).NE.0)I3=2
      IF(I3.EQ.0) GO TO 50
      GO TO (74,75),I3
 74   L1=1
      L2 = IP(2)
      I3=2
      DO 76 L = L1,L2
 76   EQIV(2,L)= (TR(2,K)/TR(2, L))**2
      GO TO 77
 75   L1 = IP(3)+1
      L2=IP(2)+IP(3)
      DO 78 L = L1,L2
  78  EQIV(3,L)=1.0/(TR(3,L)*TR(2,K))**2
      I3=3
  77  GD(I3)=GDSH(I3)
      DO 79 L = L1,L2
      IF(ICL(I3,L).EQ.2)GO TO 81
      GD(I3) = GD(I3)+(GDA(I3,L)+GDG(I3,L))*EQIV(I3,L)+GDB(I3,L)
      GO TO 79
 81   GD(I3) = GD(I3)+(GDB(I3,L)+GDG(I3,L))*EQIV(I3,L)+GDA(I3,L)
 79   CONTINUE
C     MAXM. RPM OF SHAFT 3
      RPM(3) = RPM(2)*TR(2,K)
C     MAXM. RPMS /F SUBSEQUENT SHAFTS
      L = 4
 90   INDEX = ICAR(L-1)*(IP(L-1)-1)
      RPM(L) = RPM(L-1)*TR(L-1,1)*PHI**INDEX
      IF(L.EQ.IBGSH) GO TO 91
 92   L = L+1
      IF(L.GT.NSH) GO TO 95
      GO TO 90
 91   RPM(L+1) = RPM(L-1)
      L = L+1
      GO TO 92
 95   CONTINUE
      DJOB=1000.0*100.0/3.1416/RPM(NSH)
```

```
      GDJOB = 3.1416*RHO*5.0*DJOB**5/8.0/10.0**6
      GD(NSH) = GD(NSH)+GDJOB+GDCH
      GD(1) = GD(1)+GDP
      SUMGD=0.0
C     CALC. OF GD2 OF SHAFT ASSEMBLIES AND SWITCHING POWER PER OPERATION
      DO 150 KK=1,NSH
 150   SUMGD = SUMGD+GD(KK)*RPM(KK)**2/7160.0
      PRINT 546
      SINI = 0.0
      DO 717 IT = 1,NSH
      PRINT 179,IT,GD(IT),SINI,RPM(IT)
 717  CONTINUE
      PRINT 457,SUMGD
      IF(I.NE.1) GO TO 550
      I4=I1
      J4=J
      GO TO 551
  550 I4=I3
      J4 = K+IP(3)
C     CALC. AND CHECKING W
  551 W=SUMGD/AO(I4,J4)*100.0
      PRINT541,ICT,M(I4,J4),W
      IF(W.GT.100.0) GO TO 209
      GO TO 50
  209 M(I4,J4)=M(I4,J4)+1
      PRINT541,ICT,M(I4,J4),W
      GO TO 503
   50 CONTINUE
      TMAX=TMAX*1000.0
      RETURN
      END
$ENTRY
```